DVD PLAYER
DVD-S796/DV-S5270

SERVICE MANUAL

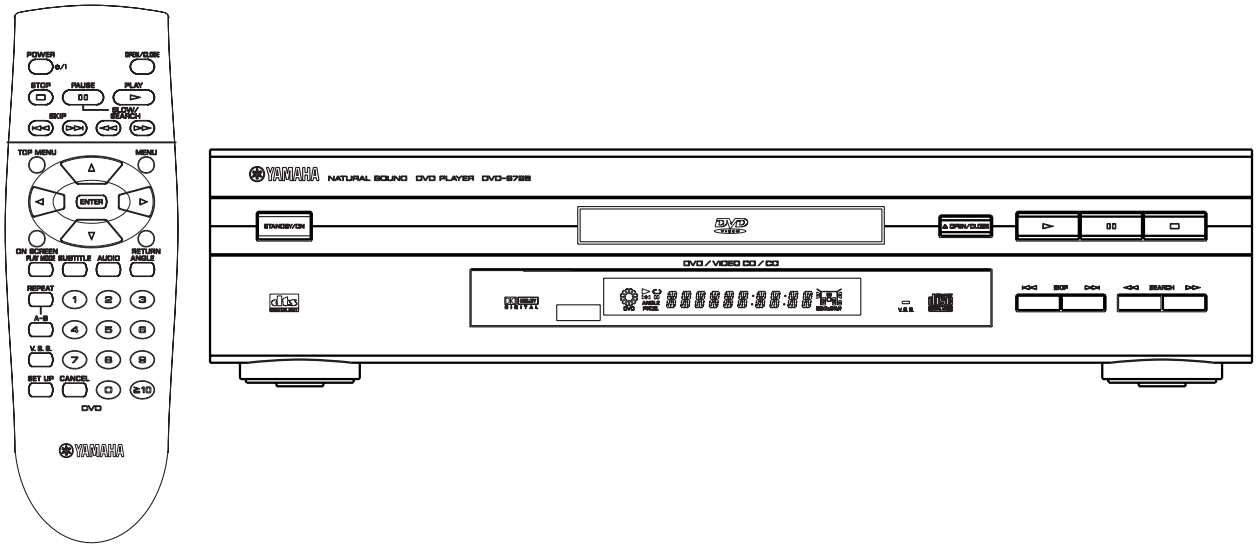

IMPORTANT NOTICE

This manual has been provided for the use of authorized YAMAHA Retailers and their service personnel.
It has been assumed that basic service procedures inherant to the industry, and more specifically YAMAHA Products, are already known and understood by the users, and have therefore not been restated.

WARNING: Failure to follow appropriate service and safety procedures when servicing this product may result in personal injury, destruction of expensive components and failure of the product to perform as specified. For these reasons, we advise all YAMAHA product owners that all service required should be performed by an authorized YAMAHA Retailer or the appointed service representative.

IMPORTANT: The presentation or sale of this manual to any individual or firm does not constitute authorization, certification or recognition of any applicable technical capabilities, or establish a principle-agent relationship of any form.

The data provided is believed to be accurate and applicable to the unit(s) indicated on the cover. The research, engineering, and service departments of YAMAHA are continually striving to improve YAMAHA products. Modifications are, therefore, inevitable and specifications are subject to change without notice or obligation to retrofit. Should any discrepancy appear to exist, please contact the distributor's Service Division.

WARNING: Static discharges can destroy expensive components. Discharge any static electricity your body may have accumulated by grounding yourself to the ground buss in the unit (heavy gauge black wires connect to this buss).

IMPORTANT: Turn the unit OFF during disassembly and parts replacement. Recheck all work before you apply power to the unit.

このサービスマニュアルは、エコマーク認定の再生紙を使用しています。
This Service Manual uses recycled paper.

100711

YAMAHA
YAMAHA CORPORATION
P.O.Box1,Hamamatsu,Japan

CONTENTS

SECTION 1

SPECIFICATIONS 1-1
LOCALE MANAGEMENT INFORMATION 1-1
TO SERVICE PERSONNEL 1-2
PREVENTION OF ESD TO ES DEVICES 1-3
PRECAUTION OF LASER DIODE 1-4
HANDILNG PRECAUTIONS FOR TRAVERSE DECK 1-4
REAR PANELS 1-5
OPTICAL PICKUP SELF-DIAGNOSIS AND REPLACEMENT PROCEDURE ... 1-6
SELF-DIAGNOSIS FUNCTION AND SERVICE MODES 1-7
SERVICE PRECAUTIONS 1-9
SERVICE TOOLS AND EQUIPMENT 1-9
OPERATING INSTRUCTIONS 1-10

SECTION 2

ASSEMBLING AND DISASSEMBLING THE CASING AND CHECKING C. B. A.s

1.Disassembly Procedure 2-1
2.Casing Parts and C.B.A. Positions 2-2
3.Service Positions 2-2
4.Disassembling the Top Cover 2-3
5.Disassembling the Tray 2-3
6.Disassembling the Front Panel 2-3
7.Disassembling the Loading Base Unit 2-4
8.Checking the Module C.B.A. 2-4
9.Disassembling the Rear Panel 2-4
10.Checking the Power Supply C.B.A. 2-5
11.Checking the Mother C.B.A. 2-5
12 Checking the Power Switch C.B.A. 2-5
13.Checking the Front Switch C.B.A. 2-5

ASSEMBLING AND DISASSEMBLING THE OPTICAL PICKUP

1.Handling the Optical Pickup 2-6
2.Disassembly Procedure 2-6
3.Lubricating the Loading Base Unit 2-7
4.Static Electricity Countermeasures 2-8
5.Disassembling the Clamp Base Unit 2-9
6.Disassembling the Clamper Weight, Clamper Yoke, Magnet and Clamper 2-9
7.Disassembling the Traverse Unit 2-9
8.Disassembling the Stepping Motor Unit 2-10
9.Disassembling the Optical Pickup Unit 2-10
10.Disassembling the Nut Unit 2-11
11.Disassembling the Sub-Shaft Preload Spring 2-11
12.Assembling the Optical Pickup 2-11
13.Disassembling the Spindle Motor Unit 2-12
14.Optical Pickup Tilt Adjustment 2-13
15.Disassembling the Intermediate Chassis 2-15
16.Disassembling the Vertical Cam and Drive Gear 2-15
17.Disassembling the Pulley Gear and Deceleration Gear 2-15
18.Disassembling the Mechanism Loading C.B.A. 2-15
19.Lubricating the Optical Pickup and Peripheral parts 2-16

ELECTRICAL CONFIRMATION

1.Video Output (Luminance Signal) Confirmation 2-17
2.Video Output (Chrominance Signal) Confirmation 2-17
3.Video Component Signal (CB) Output Confirmation . 2-18

SECTION 3

ABBREVIATIONS 3-1

BLOCK DIAGRAM

1.OVERALL BLOCK DIAGRAM 3-3
2.SERVO BLOCK DIAGRAM 3-4
3.VIDEO BLOCK DIAGRAM (FOR U, A, R MODELS) . 3-5
4.VIDEO BLOCK DIAGRAM (FOR G, B MODEL) 3-6
5.AUDIO BLOCK DIAGRAM 3-7

INTERCONNECTION DIAGRAM

1.U, A, R MODELS 3-8
2.G, B MODELS 3-9

SCHEMATIC DIAGRAM

1.POWER SUPPLY SCHEMATIC DIAGRAM (FOR U MODEL) 3-10
2.POWER SUPPLY SCHEMATIC DIAGRAM (FOR G, B, A MODELS) 3-11
3.POWER SUPPLY SCHEMATIC DIAGRAM (FOR R MODEL) 3-12
4.ADSC (MODULE C.B.A. 1/6) SCHEMATIC DIAGRAM 3-13
5.AV DECODER (MODULE C.B.A. 2/6) SCHEMATIC DIAGRAM (FOR U MODEL) 3-14
6.AV DECODER (MODULE C.B.A 2/6) SCHEMATIC DIAGRAM (FOR G, B, A, R MODELS) 3-15
7.AUDIO (MODULE C.B.A. 3/6) SCHEMATIC DIAGRAM 3-16
8.FEP (MODULE C.B.A. 4/6) SCHEMATIC DIAGRAM 3-17
9.CPU (MODULE C.B.A. 5/6) SCHEMATIC DIAGRAM 3-18
10.ODC (MODULE C.B.A. 6/6) SCHEMATIC DIAGRAM ... 3-19
11.VIDEO OUT (MOTHER C.B.A. 1/4) SCHEMATIC DIAGRAM (FOR U, A, R MODELS) ... 3-20
12.VIDEO OUT (MOTHER C.B.A 1/4) SCHEMATIC DIAGRAM (FOR G, B MODELS) 3-21
13.AUDIO OUT1 (MOTHER C.B.A. 2/4) SCHEMATIC DIAGRAM 3-22
14.AUDIO OUT2 (MOTHER C.B.A. 3/4) SCHEMATIC DIAGRAM. 3-23
15.OPERATION (MOTHER C.B.A. 4/4) SCHEMATIC DIAGRAM 3-24
16.FRONT SW AND POWER SW SCHEMATIC DIAGRAM .. 3-25
17.SCART SCHEMATIC DIAGRAM (FOR G, B MODELS) ... 3-26

CIRCUIT BOARD DIAGRAM

1.POWER SUPPLY C.B.A. (FOR U MODEL) 3-27
2.POWER SUPPLY C.B.A. (FOR G, B, A MODELS) 3-28
3.POWER SUPPLY C.B.A. (FOR R MODEL) 3-29
4.MODULE C.B.A. 3-30
5.MOTHER C.B.A. 3-32
6.FRONT SW AND POWER SW C.B.A. 3-33
7.SCART C.B.A. (FOR G, B MODELS) 3-34

SECTION 4

EXPLODED VIEWS & REPLACEMENT PARTS LIST

1.Electrical Replacement Parts List 4-11
2.Casing Parts & Mechanism Section 4-13
3.Loading Mechanism Section 4-15
4.Traverse Section 4-17
5.Remote Control Transmitter 4-18

SECTION 1
SPECIFICATIONS

Power requlrements: **For U model**
AC 120V,60Hz
For G, B, A models
AC 220 – 240V, 50Hz
For R model
AC 110 – 240V, 50/60Hz

Power consumption: **For U model**
14W (approx. 2W when set to the standly mode)
For G, B, A, R models
14W (approx. 4W when set to the standby mode)

Signal system: **For U model**
NTSC
For G, B, A, R models
PAL 625/50, PAL 525/60

Weight: 7lbs. 4oz (3.3kg)
Dimensions: 17-1/8" (W) X 10-7/8" (D) X 3-7/8" (H)
[435 (W) X 276 (D) X 99 (H) mm]

Operating temperature range: +50° to +35°C (+41° to +95°F)

Operating humidity range: 5 to 90% (no condensation)

Discs played:
(1) DVD-VIDEO disc
5" (12cm) single-sided, single-layer
5" (12cm) single-sided, double-layer
5" (12cm) double-sided, single-layer
3" (8cm) single-sided, single-layer
3" (8cm) single-sided, double-layer
3" (8cm) double-sided, single-layer
(2) Compact disc (CD-DA, VIDEO CD)
5" (12cm) disc
3" (8cm) disc

S-video output:
Y output level: 1Vp-p (75Ω)
C output level: 0.286Vp-p (75Ω)
Output connector: S terminal (1 system)

Video output:
Output level: 1Vp-p (75Ω)
Output connector: Pin jack (1 system)

Compact video output:
For U, A, R models only
Y output level: 1Vp-p (75Ω), green
PB output level: 0.7Vp-p (75Ω), blue
PR output level: 0.7Vp-p (75Ω), red
Output connector: Pin jack

Audio output:
Output level: 2 Vrms (1kHz, 0dB)
Output connector: Pin jack
Mixed output: 1 system
Subwoofer output: 1 system

Audio signal output characteristics:
(1) Frequency response:
DVD (linear audio):
2Hz to 22kHz (48kHz sampling)
2Hz to 44kHz (96kHz sampling)
CD audio:
2Hz to 20kHz (EIAJ)
(2) S/N ratio:
CD audio: 115dB (EIAJ)
(3) Dynamic range:
DVD (linear audio): 102dB
CD audio: 98dB (EIAJ)
(4) Total harmonic distortion:
CD audio: 0.0025% (EIAJ)

Digital audio output:
Optical digital output: Optical connector

Pickup: Wave length: 655nm
Laser power: CLASS II
Laser output: Max. 1.0 mW (Continuous)

Color:

DVD-S796BU	Black
DV-S5270BU	Black
DVD-S796BG	Black
DVD-S796TG	Titanium
DVD-S796GG	Gold
DVD-S796BB	Black
DVD-S796BA	Black
DVD-S796GR	Gold

Specifications are subject to change without notice.
Weight and dimensions are approximate.

U ..... U.S.A. model
R ..... Asian model
A ..... Australlan model
G ..... European model
B ..... United Kindom model

Manufactured under license from Dolby Laboratories Licensing Corporation. "Dolby" and the double-D symbol are trademarks of Dolby Laboratories Licensing Corporation.

LOCALE MANAGEMENT INFORMATION

Locale Management Information: This DVD player is designed and manufactured to respond to the Locale Management information that is recorded on a DVD disc. If the Locale number described on the DVD disc does not correspond to the Locale number of this DVD player, this DVD player cannot play this disc. (See page1-3, REGION CODE.)

This product incorporates copyright protection technology that is protected by method claims of certain U.S. patents and other intellectual property rights owned by Macrovision Corporation and other rights owners. Use of this copyright protection techology must be authorized by Macrovision Corporation, and is intended for home and other limited viewing uses only unless otherwise authorized by Macrovision Corporation. Reverse engineering or disassembly is prohibited.

TO SERVICE PERSONNEL

1. Critical Components Information

   Components having special characteristics are marked ⚠ and must be replaced with parts having specifications equal to those originally installed.

2. Leakage Current Measurement (For 120V Models Only)
   When service has been completed, it is imperative to verify that all exposed conductive surfaces are properly insulated from supply circuits.

- Meter impedance should be equivalent to 1500 ohm shunted by 0.15μF.
- Leakage current must not exceed 0.5mA.

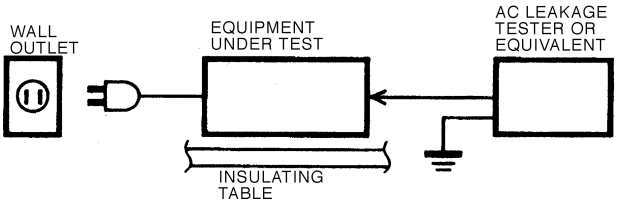

- Be sure to test for leakage with the AC plug in both polarites.

WARNING: CHEMICAL CONTENT NOTICE!

The solder used in the production of this product contains LEAD. In addition, other electrical/electronic and/or plastic (where applicable) components may also contain traces of chemicals found by the California Health and Welfare Agency (and possibly other entities) to cause cancer and/or birth defects or other reproductive harm.

DO NOT PLACE SOLDER, ELECTRICAL/ELECTRONIC OR PLASTIC COMPONENTS IN YOUR MOUTH FOR ANY REASON WHATSOEVER!

Avoid prolonged, unprotected contact between solder and your skin! When soldering, do not inhale solder fumes or expose eyes to solder/flux vapor!

If you come in contact with solder or components located inside the enclosure of this product, wash your hands before handling food.

WARNING: Laser Safety

This product contains a laser beam component. This component may emit invisible, as well as visible radiation, which may cause eye damage. To protect your eyes and skin from laser radiation, the following precautions must be used during servicing of the unit.

1) When testing and/or repairing any component within the product, keep your eyes and skin more than 30cm away from the laser pick-up unit at all times. Do not stare the laser beam at any time.

2) Do not attempt readjustment, disassemble or repair of the laser pick-up, unless notes elsewhere in this manual.

3) CAUTION : Use of controls, adjustments or performance of procedures other than those specified herein may result in hazardous radiation exposure.

Laser Emitting conditions:

1) When the Top Cover is removed, and POWER SW is turned to the "ON" position, the laser component will emit a beam for several seconds to detect if a disc is present. During this time (5-10sec.) the laser may radiate through the lens of the laser pick-up unit. Do not attempt any servicing during this period! If no disc is detected, the laser will stop emitting the beam. When a disc is set, you will not be exposed to any laser emissions.

2) The laser power level can be adjusted with VR on pick-up PWB, however, this level has been set by the factory prior to shipping from the factory. Do not adjust this laser level control unless instruction is provided elsewhere in this manual.
   Adjustment of this control can increase the laser emission level from the device.

Laser Diode Properties

Material	: GaAlAs	Laser output	: Max.6mW
Wavelength	: 660~676nm	ANSI Class	: Class 1
Emission duration	: Continuous		

* This output is the value measured at a distance of about 200mm from the objective lens surface on the Optical Pick-up Block,

VARO! : AVATTAESSA JA SUOJALUKITUS OHITETTAESSA OLET ALTTIINA NÄKYMÄTTÖMÄLLE LASER-SÄTEILYLLE. ÄLÄ KATUO SÄTEESEEN.

VARNING! : OSYNIG LASERSTRÅLNING NÄR DENNA DEL ÄR ÖPPNAD OCH SPÄRREN ÄR URKOPPLAD. BETRAKTA EJ STRÅLEN.

① G, B models

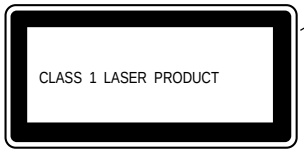

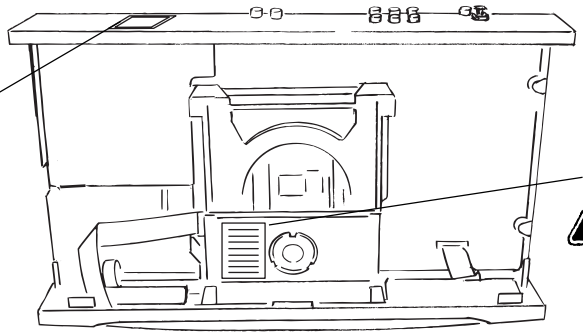

② G, B models

PREVENTION OF ELECTRO STATIC DISCHARGE (ESD) TO ELECTROSTATICALLY SENSITIVE (ES) DEVICES

Some semiconductor (solid state) devices can be damaged easily by static electricity. Such components commonly are called Electrostatically Sensitive (ES) Devices. Examples of typical ES devices are integrated circuits and some field-effect transistors and semiconductor “chip” components. The following techniques are used to help reduce the incidence of component damage caused by electro static discharge (ESD).

1. Immediately before handling any semiconductor component or semiconductor-equipped assembly, drain off any ESD on your body by touching a known earth ground. Alternatively, obtain and wear a commercially available discharging ESD wrist strap, which should be removed for potential shock reasons prior to applying power to the unit under test.
2. After removing an electrical assembly equipped with ES devices, place the assembly on a conductive surface such as aluminum foil, to prevent electrostatic charge buildup or exposure of the assembly.
3. Use only a grounded-tip soldering iron to solder or unsolder ES devices.
4. Use only a anti-static solder removal device. Some solder removal devices not classified as “anti-static (ESD protected)” can generate electrical charge sufficient to damage ES devices.
5. Do not use freon-propelled chemicals. These can generate electrical charges sufficient to damage ES devices.
6. Do not remove a replacement ES device from its protective package until immediately before you are ready to install it. (Most replacement ES devices are packaged with leads electrically shorted together by conductive foam, aluminum foil or comparable conductive material).
7. Immediately before removing the protective material from the leads of a replacement ES divice, touch the protective material to the chassis or circuit assembly into which the device will be installed.
   CAUTION: Be sure no power is applied to the chassis or circuit, and observe all other safety precautions.
8. Minimize bodily motions when handling unpackaged replacement ES devices. (Otherwise harmless motion such as the brushing together of your clothes fabric or the lifting of your foot from a carpeted floor can generate static electricity (ESD) sufficient to damage an ES device).

IMPORTANT SAFETY NOTICE

There are special components used in this equipment which are important for safety.
These parts are marked ⚠ by in the schematic diagrams, exploded views and replacement parts list. It is essential that these critical parts should be replaced with manufacturer’s specified parts to prevent shock, fire, or other hazards. Do not modify the original design without permission of manufacturer.

REGION CODE

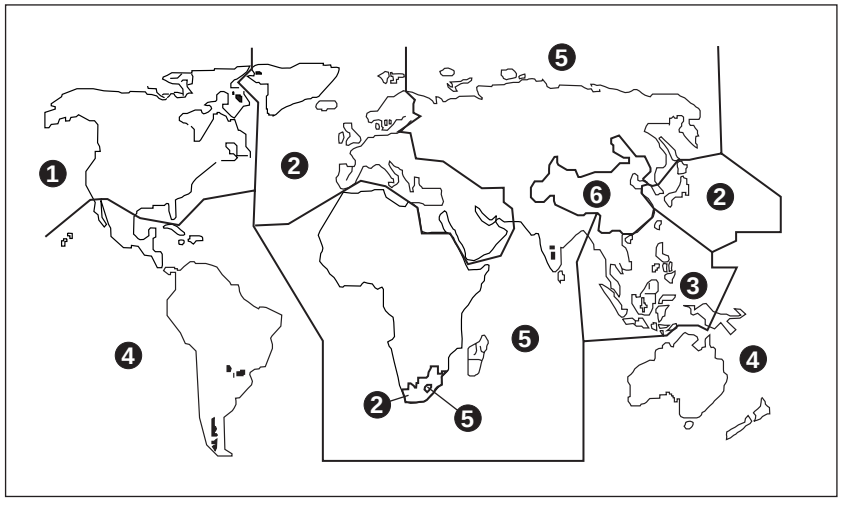

PRECAUTION OF LASER DIODE

CAUTION:

This unit utilizes a class II laser. Visible laser radiation is emitted from the optical pickup lens when the unit is truned on:

1. Do not look directly into the pickup lens.
2. Do not use optical instruments to look at the pickup lens.
3. Do not adjust the preset variable resistor on the optical pickup.
4. Do not disassemble the optical pickup unit.
5. If the optical pickup is replaced, use the manufactures specified replacement pickup only.
6. Use of control or adjustment or performance of procedures other than those specified herein may result in hazardous radiation exposure.

HANDLING PRECAUTIONS FOR TRAVERSE DECK

The laser diode in the optical pickup may break down due to potential difference caused by static electricity of clothes or human body.
So be careful of electrostatic breakdown during repair of the optical pickup.

Handling of optical pickup

1. Do not subject the optical pickup to static electricity as it is extremely sensitive to electrical shock.
2. To prevent the breakdown of the laser diode, an antistatic shorting pin is inserted into the flexible board (FPC Board).
   When removing or connecting the short pin, finish the job in as short times as possible.
3. Be careful not to apply excessive stress to the flexible board (FPC Board).
4. Do not turn the variable resistor (Laser power adjustment). It has already been adjusted.

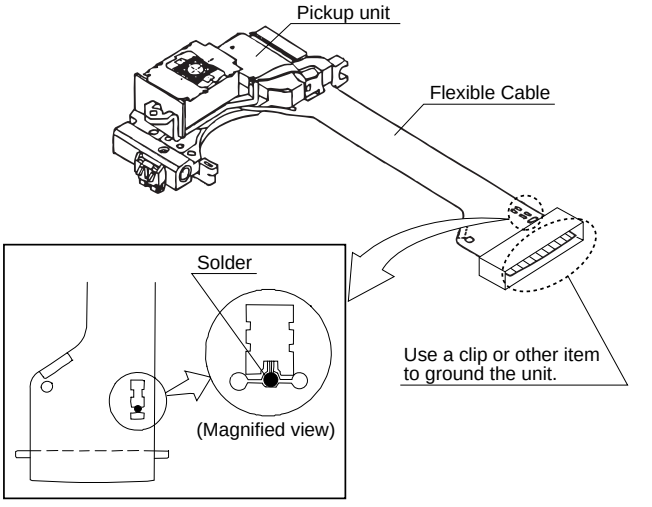

Grounding for electrostatic breakdown prevention

1. Human body grounding.
   Use the antistatic wrist strap to discharge the static electricity from your body.
2. Work table grounding.
   Put a conductive material (sheet) or steel on the area where the optical pickup is placed and ground the sheet.

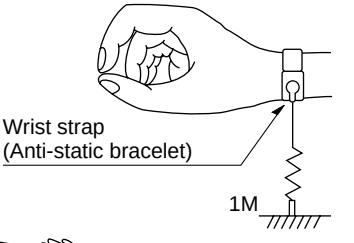

Caution:

The static electricity of your clothes will not be grounded through the wrist strap. So take care not to let your clothes touch the optical pickup.

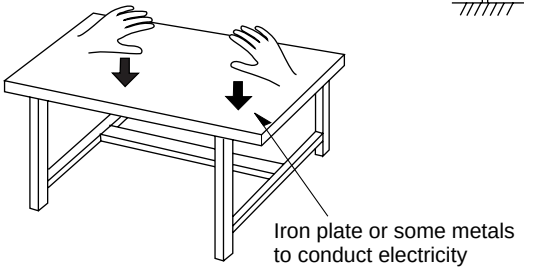

REAR PANELS

U model

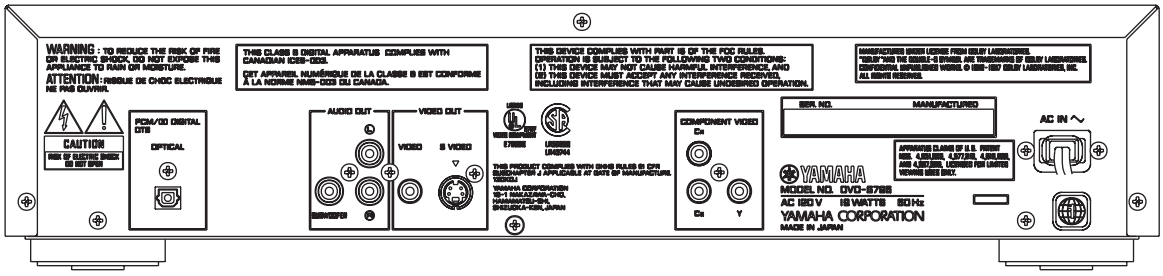

G, B models

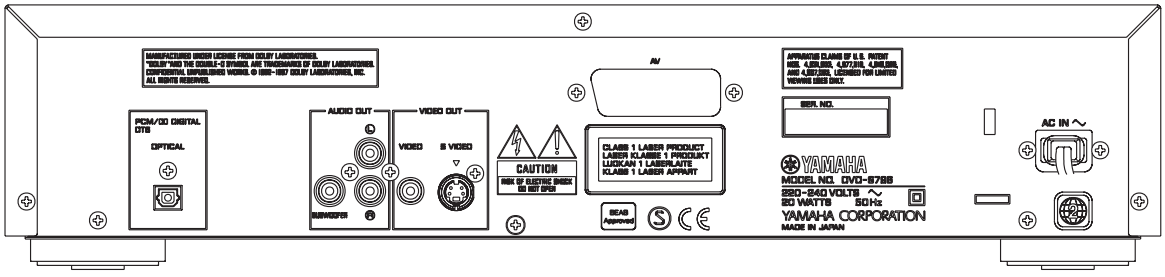

R model

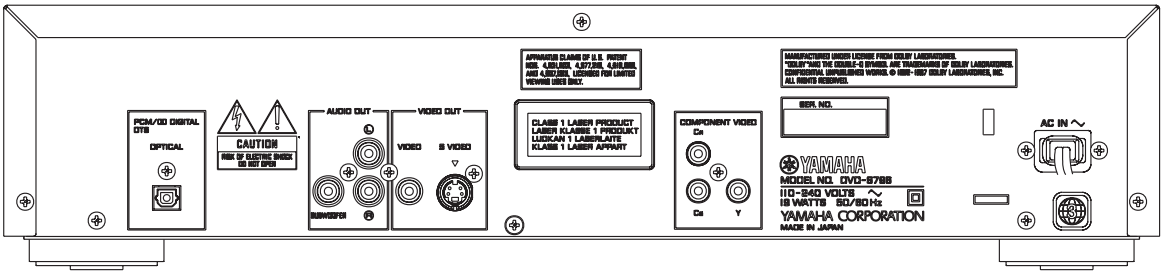

A model

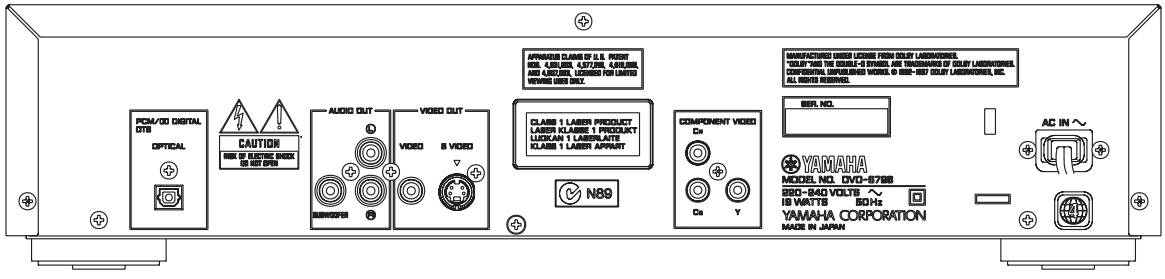

OPTICAL PICKUP SELF-DIAGNOSIS AND REPLACEMENT PROCEDURE

The optical pickup self-diagnosis function and tilt adjustment check function have been newly added to this player. When repairing, use the following procedure for effective Self-diagnosis and tilt adjustment.
Be sure to use the self-diagnosis function before replacing the optical pickup when “NO DISC” is displayed. As a guideline, you should replace the optical pickup when the value of the laser drive current is more than 50.

Note

Press the power button to turn on the power, and check the value before the unit warms up (within three minutes).

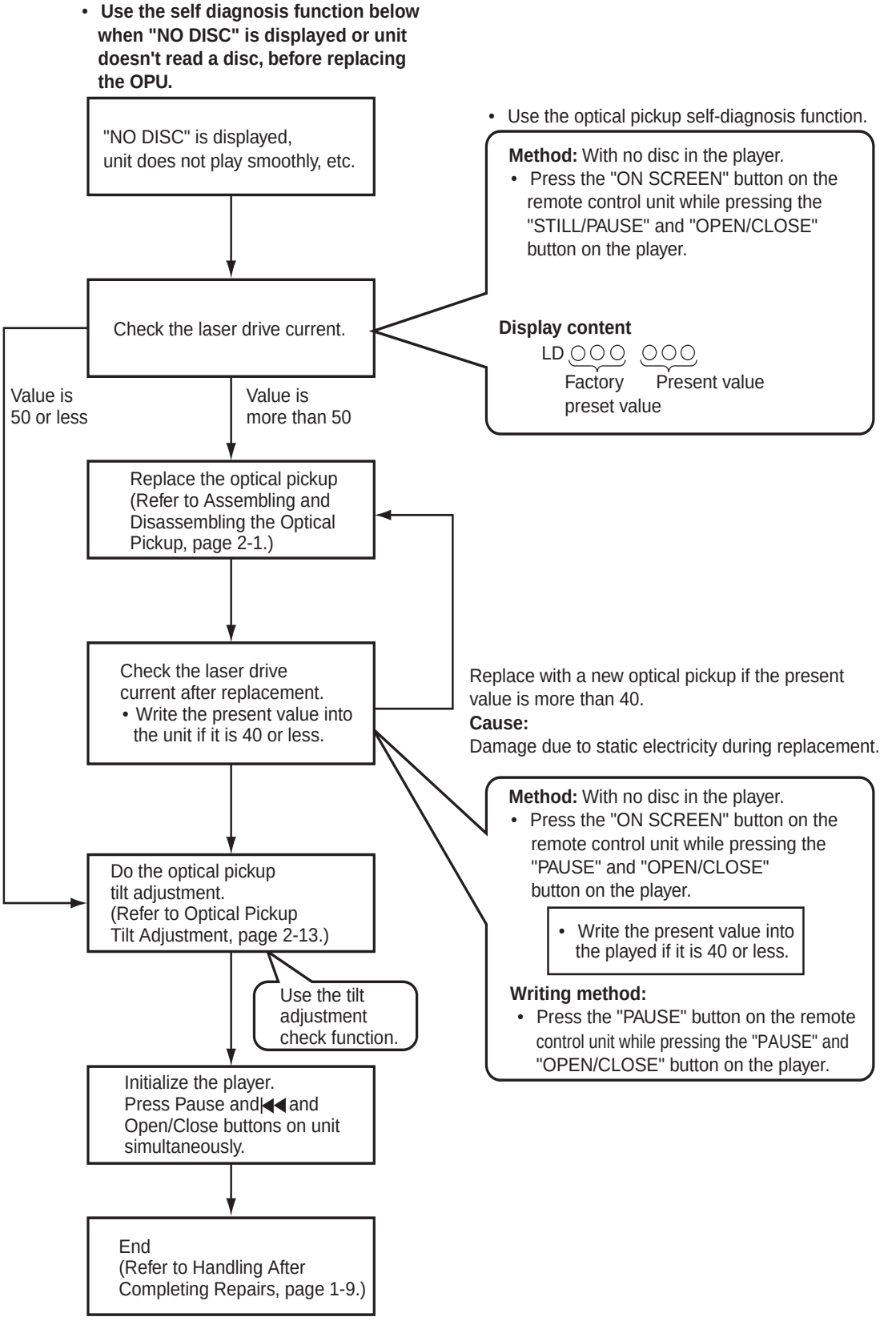

SELF-DIAGNOSIS FUNCTION AND SERVICE MODES

1. Service Mode Table

The service mode can be activated by pressing various button combinations on the player and remote control unit.

Player buttons	Remote control unit button	Application	Note
PAUSE + OPEN/CLOSE	0	Displaying the UHF display F_ _ _	Refer to Self-Diagnosis Function (UHF Display),in page 1-7.
	5	Tilt adjustment (JIT 070 to JIT 090 is normal range for a good pickup head.)	Refer to Optical Pickup Tilt Adjustment, in page 2-13.
	6	Checking the region numbers and broadcast system	
	7	Checking the program version	Check the IC6302 FLASH ROM program.
	9	Lighting Confirmation Function of Display Tube	
	ON SCREEN	Checking the laser drive current	Refer to Optical Pickup Self-Diagnosis and Replacement, in page 1-6.
	STILL/PAUSE	Writing the laser drive current value after replacing the optical pickup (do not use for anything other than optical pickup replacement)	Procedure.
STILL/PAUSE SKIP ⏮ OPEN/CLOSE	——	Initializing the DVD player (restoring factory preset settings) Use when replaceing a microprocessor, microprocessor peripheral parts, or C. B. A.	Refer to Initializing the DVD Player, in page 1-9.

2. Self-Diagnosis Function (UHF Display)

This unit incorporates a convenient self-diagnosis function for use in troubleshooting.

Display method	Display	Diagnosis	Checkpoints
Service numbers displayed during use.	U11	Focus error	IC2001,IC2511,IC5201,pickup
	H01	Tray loading error	IC2001,IC2511 loading motor
	H02	Spindle servo error	Spindle motor, IC2501,IC2001
	H03	Traverse error	Stepping motor,IC2511,IC2001
	H04	Tracking servo error	IC2001,IC2501,IC5201,pickup,disc
	H05	Seek error	Stepping motor,IC2511,IC2001
	H06	Power supply error	IC1021,IC1121,IC1151,IC6001
Press the "0" button on the remote control unit while pressing the "STILL/PAUSE" and "OPEN/CLOSE" button on the player.	F0**	Disc format error	If this type of error occurs,refer to Examples of Repairs Using Error Codes, in page 1-8.
	F1**	Disc code error	
	F2**	Decoder LSI error	
	F3**	SDRAM error	
	F4**	IIC BUS error	
	F5**	DSC	
	F6**	ECC error	
	F7**	Microprocessor error	
	F8**	Microprocessor error	

3. Examples of Repairs Using Error Code

Refer to this section when carrying out repairs.

Error display	Malfunction example
F0**	Disc, IC7001
F103	Disc, IC7001
F4FF	IC6001
F500	Optical pickup, IC2001, IC5201, IC2511, IC2501
F501	IC2001, IC6201
F502	IC2501, IC2511, IC2001, IC5202
F504	IC5202, IC2001
F505	Disc, IC2501, IC2511, IC5202, IC2001
F506	Disc, Optical pickup, IC2001
F600	Disc, IC7001, IC5202, IC2001
F601	Disc, IC7001
F602	Disc, IC5202, IC2001
F603	Disc, IC5202, IC2001
F610	IC7001
F611	IC7001, IC5202, IC2001
F612	IC7001, IC15202,IC2001
F620	Laser drive circuit
F621	Laser drive circuit
F700	IC6201
F701	IC6201
F702	IC6201
F880	IC6201
F890	IC6201
F891	IC6201
F8A0	IC6201
F893	IC6302
F894	IC6303

4. Sales Demonstration Lock Function

This function prevents discs from being lost when the unit is used for sales demonstrations, by disabling the disc eject function. “LOCKED” is displayed on the unit, and ordinary operation is disabled.

4-1. Setting Method

The sales demonstration lock function is set by simultaneously pressing the “POWER” button of DVD Player on the remote control unit and the “STOP” button on the main unit. (“LOCKED” is displayed when the lock function is engaged.)

4-2. Release Method

The function can be released using the same procedure as for setting. If the remote control unit is not at hand, the function can be released by using the same method as for player initialization (pressing the “PAUSE”, “SKIP ⏮ ” and “OPEN/CLOSE” buttons simultaneously).

SERVICE PRECAUTIONS

1. Initializing the DVD Player

Initialize the DVD player whenever you replace a microprocessor, microprocessor peripheral parts, module C.B.A or mother C.B.A.

1-1. Precautions

The customer settings will return to factory preset settings when the player is initialized. Make a note of the settings and reset them after initializing.

- When resetting, see the Initial Setting in the Operating Instructions.

1-2. Initialization Method

The player will be initialized (return to the factory preset condition) when you press the “PAUSE”, “SKIP ⏮ “ and “OPEN/CLOSE” buttons simultaneously. When the DVD player is initialized, “All Clear” appears on screen, it also displays “INITIALIZED”.

2. Handling After Completing Repairs

Use the following procedure to secure the traverse unit in the standby position.

2-1. Method

With the power turned on:

1. Press the “OPEN/CLOSE” button to close the tray.
2. Press the “POWER” button to turn off the power.
3. Disconnect the power plug from the outlet.

2-2. Precautions

Do not disconnect the power plug from the outlet with the tray still open, then close the tray manually. If you were to do so, the traverse unit would not go to the upper (standby) position, and the player could not be transported.

SERVICE TOOLS AND EQUIPMENT

1. Service Tools and Equipment Table

Application	Name	Number
General	DVD test disc	DVDT-S15 (AAX07320) or DVDT-S01 (TX946080)
Tilt adjustment	Hex wrench	JZS0100 (TX946380) , 1.2mm
	Adjustment table	
Inspection	Extension cables (Power supply C.B.A. to mother C.B.A.)	JGS0099 (TX946360)
	Extension cable (module C.B.A. to mother C.B.A.)	JGS0098 (TX946370) × 2
Others	Screw lock	RZZ0L01 (TX946400)
	Grease	JGS0091 (TX946260) JGS0092 (TX946270)
	Lubricant	JZS0648 (TX946410)
	Grease	JGS0101 (TX946390)
Confirmation	CD test disc	SZZP1054C (TX946090)
	VCD test disc	PVCD_K06 (TX946090)
Electrical adjustment	Oscilloscope	
	Probe	
	AV cable	VJA0658 (MX605190)
	TV monitor	
General	General tools (Screwdriver, etc.)	
Static electricity countermeasures	Soldering iron (with ESD countermeasure)	
	Anti-static wrist strap	
	Conductive material (conductive sheet)	

2. Storing and Handling Test Discs

Surface precision is vital for DVD test discs. Be sure to store and handle them carefully.

1. Do not place discs directly onto the workbench, etc., after use.
2. Handle discs carefully in order to maintain their flatness.
   Place them into their case after use and store them verically. Store discs in a cool place where they are not exposed to direct sunlight or air from air conditioners.
3. Accurate adjustment will not be possible if the disc is warped from being placed on a surface made of glass, etc. If this happens, use a new test disc to make optical adjustments.
4. If adjustment is done using a warped disc, the adjustment will be incorrect and some discs will not be playable.

OPERATING INSTRUCTIONS

Control reference guide

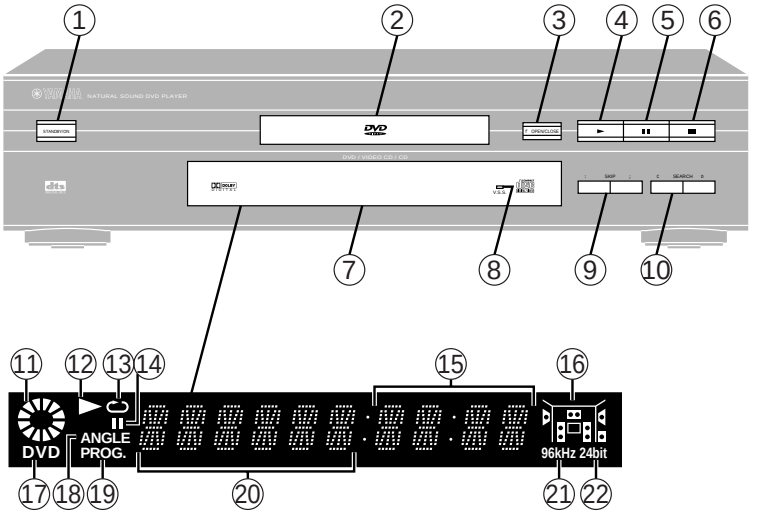

Buttons such as ❶ function in exactly the same way as the buttons on the player.

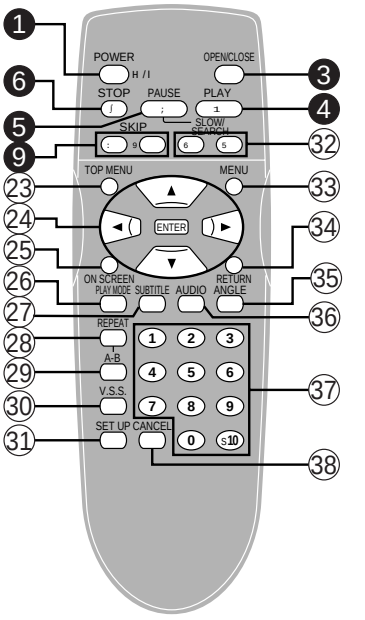

Player

Owner's Manual Page

① **Standby/On button (STANDBY/ON)** **14**
Press to switch the unit from on to standby mode or vice versa. In standby mode, the unit is still consuming a small amount of power.
② **Disc tray** **14**
③ **Disc tray open/close button (⏏OPEN/CLOSE)** **14**
④ **Play button (▶)** **14**
⑤ **Pause button (❚❚)** **16**
⑥ **Stop button (■)** **15**
⑦ **FL display**
⑧ **Virtual Surround Sound indicator (V.S.S.)** **21**
⑨ **Skip button (⏮ SKIP ⏭)** **16**
⑩ **Search button (◀◀ SEARCH ▶▶)** **17**
⑪ **Rotates during play.**
Rotates fast clockwise or counter clockwise during rapid advance (reverse).
Rotates slowly clockwise or counter clockwise during slow-motion play. DVD VCD

Illuminates in the stop mode.

⑫ **Illuminates during playback.**
Flashes when the RESUME function is ON.
⑬ **Illuminates during repeat play.**
⑭ **Illuminates in the still picture (pause) mode.**
⑮ **Elapsed playing time from the start of the title/track during play.**
⑯ **Audio channel information recorded in the disc being played back (e.g. 2ch or 5.1ch).**

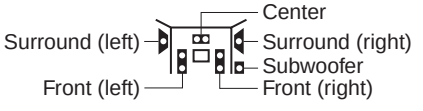

⑰ **A DVD is loaded.**
⑱ **It is possible to switch the angle.** DVD
⑲ **Illuminates during program play.** VCD CD
⑳ **Title/chapter number** DVD
㉑ **Track number** VCD CD
Linear PCM of 96 kHz sampling is being played.
㉒ **Linear PCM of 24 bit is being played.**

Remote control

Owner's Manual Page

㉓ **Top menu button (TOP MENU)** **14**
㉔ **Cursol button (▲, ▼, ◀, ▶) /Enter button (ENTER)** .. **14**
㉕ **On screen button (ON SCREEN)** **25**
㉖ **Play mode button (PLAY MODE)** **23**
㉗ **Subtitle button (SUBTITLE)** **20**
㉘ **Repeat button (REPEAT)** **22**
㉙ **A-B repeat button (A-B)** **22**
㉚ **Virtual Surround Sound button (V.S.S.)** **21**
㉛ **Setup buttons (SET UP)** **28**
㉜ **Slow/Search buttons (◀◀ , ▶▶ SLOW/SEARCH)** **17**
㉝ **Menu button (MENU)** **14**
㉞ **Return button (RETURN)** **14**
㉟ **Angle button (ANGLE)** **20**
㊱ **Audio button (AUDIO)** **19**
㊲ **Numeric buttons (1-9, 0, ≧ 10)** **14**
- **To select a 2-digit number**
  Example: To select track 23
  Press [≦ 10], then [2] and [3].

㊳ **Cancel button (CANCEL)** **23**

SECTION 2
ASSEMBLING AND DISASSEMBLING THE CASING AND CHECKING C.B.A.s

1. Disassembly Procedure

When servicing the unit, use the following procedure to disassemble the casing and inside parts for internal inspection.

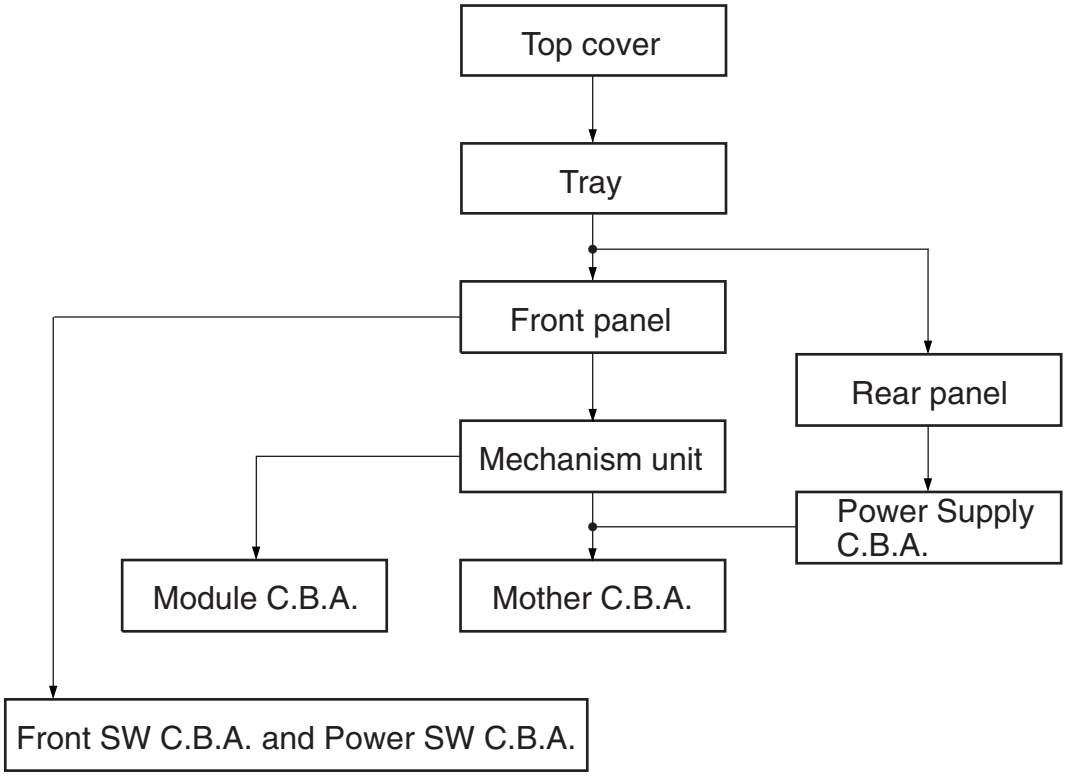

2. Casing Parts and C.B.A. Positions

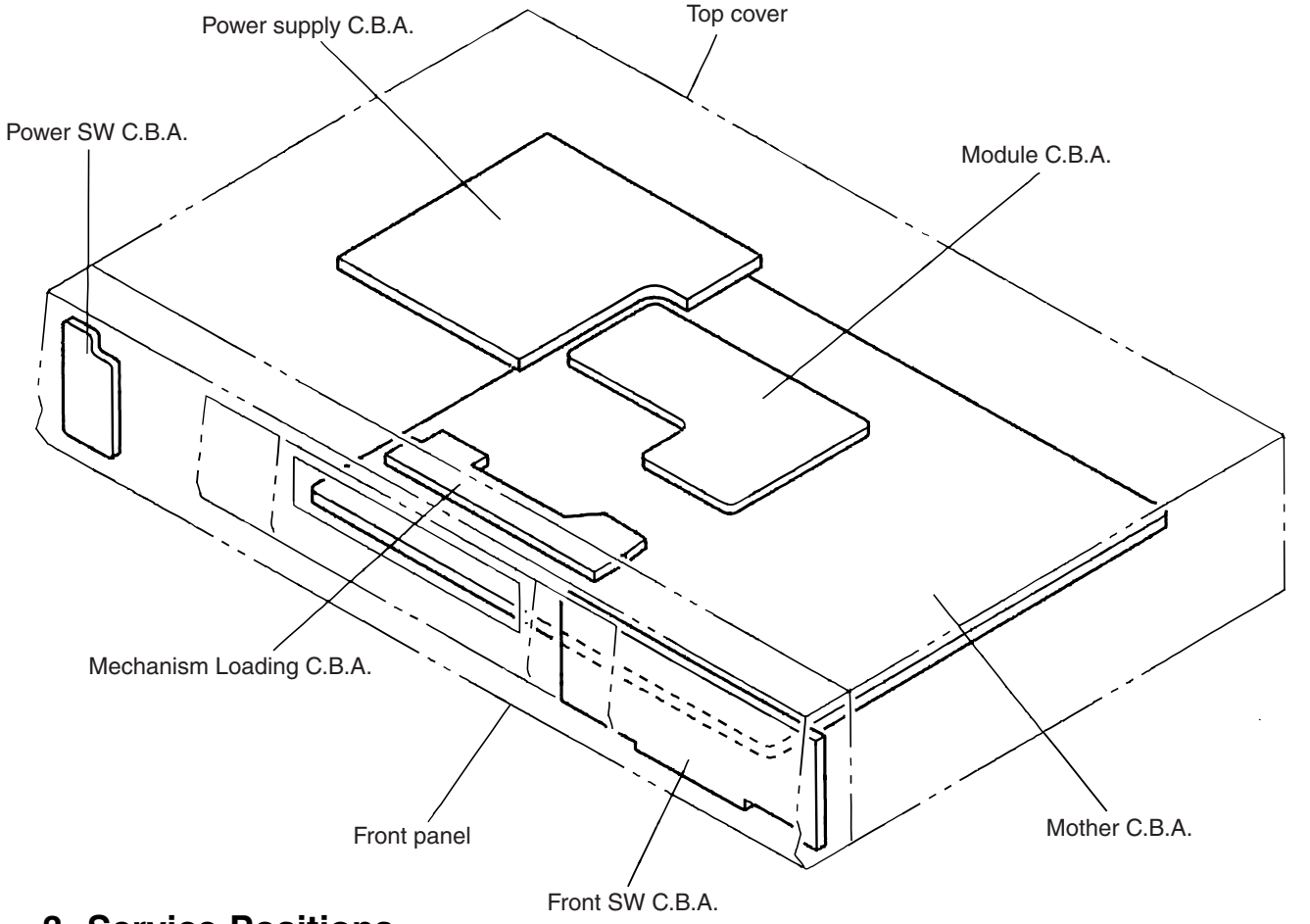

3. Service Positions

Note

To inspect the loading base unit, position the left side upward (as viewed from the front).

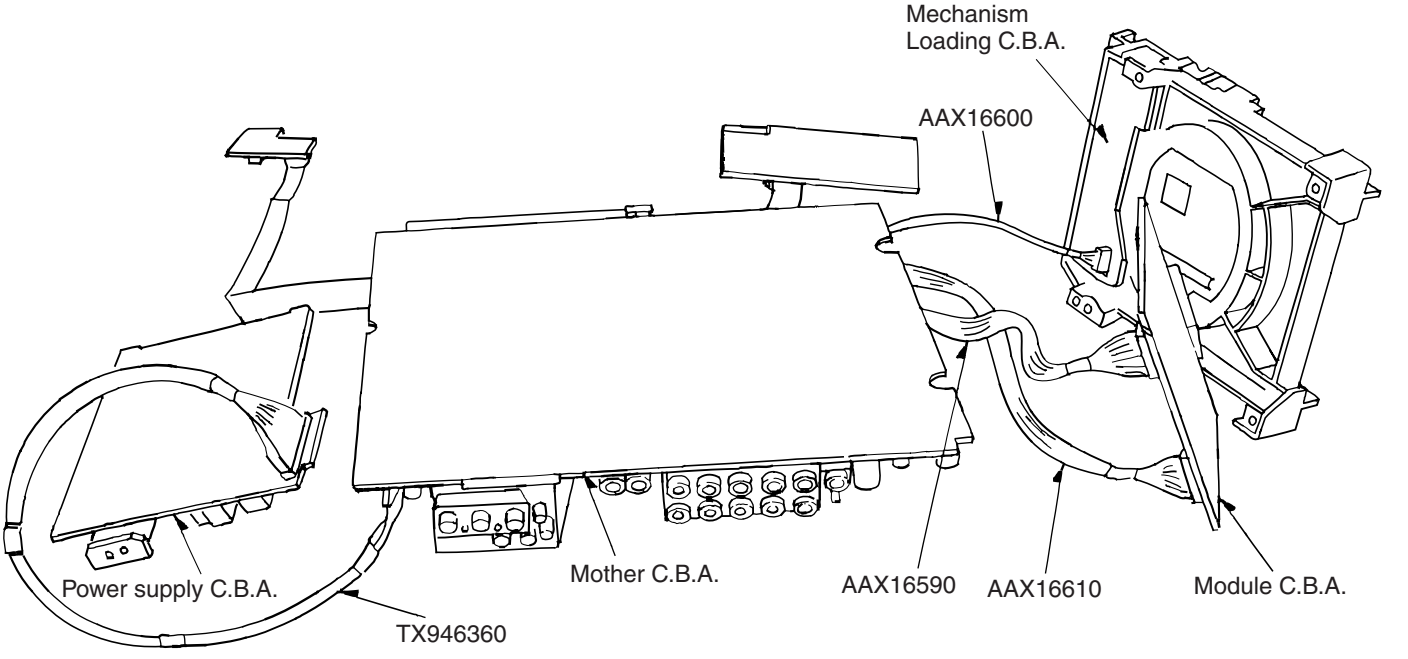

4. Disassembling the Top Cover

1. Remove the 4 screws.

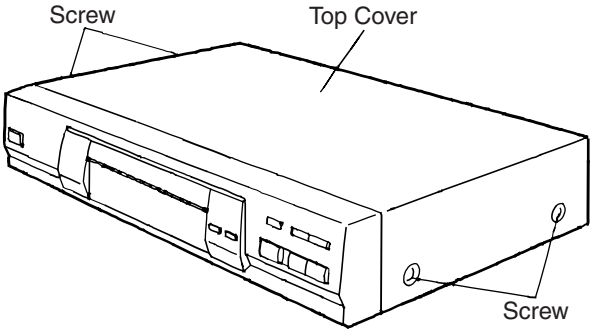

2. Remove the 3 screws.

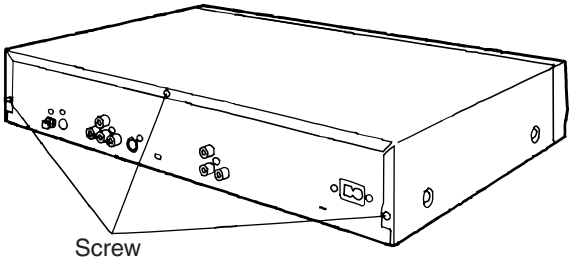

5. Disassembling the Tray

1. Turn the lever clockwise.
2. Move the tray in the direction of the arrow until it locks.
3. Release the tab locks on the left and right, then pull out the tray.

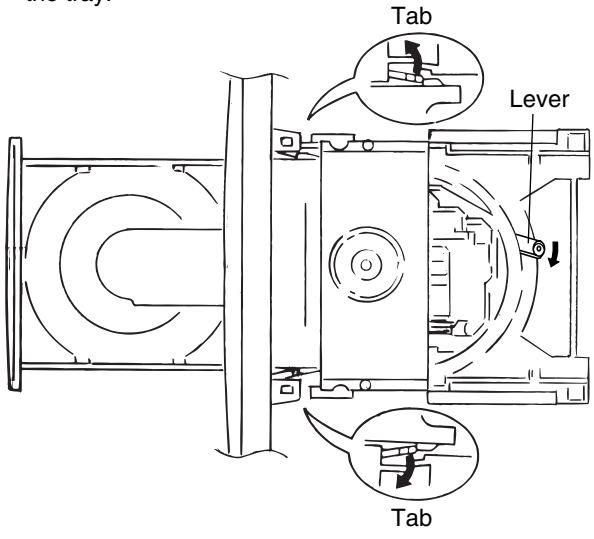

6. Disassembling the Front Panel

1. Release the 3 tabs on the bottom.
2. Release the 2 tabs on the left and right.

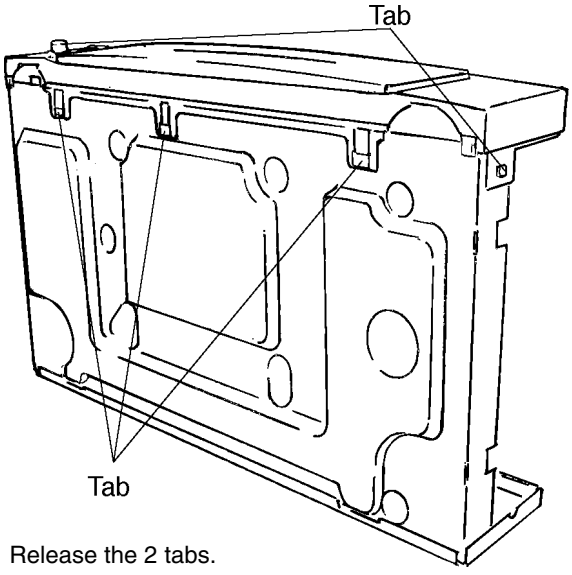

3. Release the 2 tabs.
4. Disconnect the 2 flexible cables.

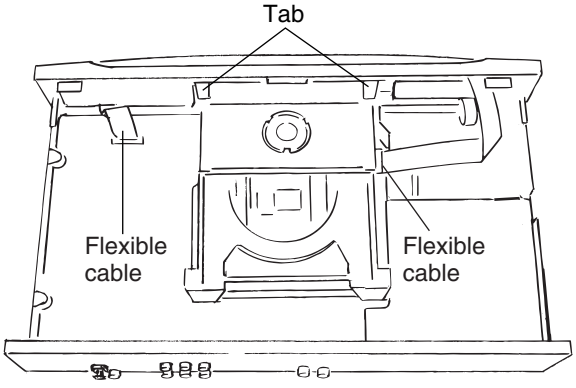

7. Disassembling the Loading Base Unit

1. Remove the 4 screws.
2. Pull out the loading base unit vertically.

Note

There is a danger of damaging the connectors.

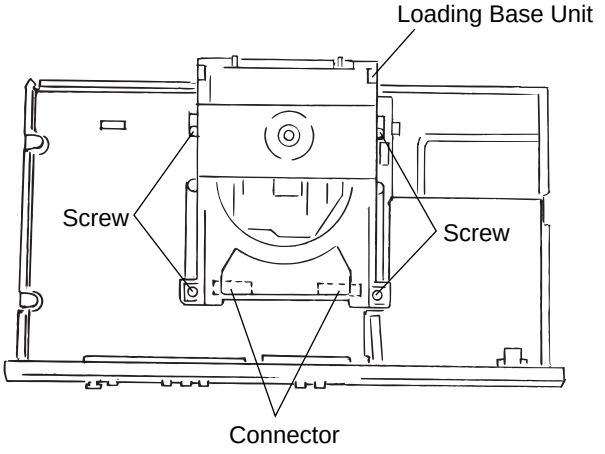

8. Checking the Module C.B.A.

1. Remove the screw.

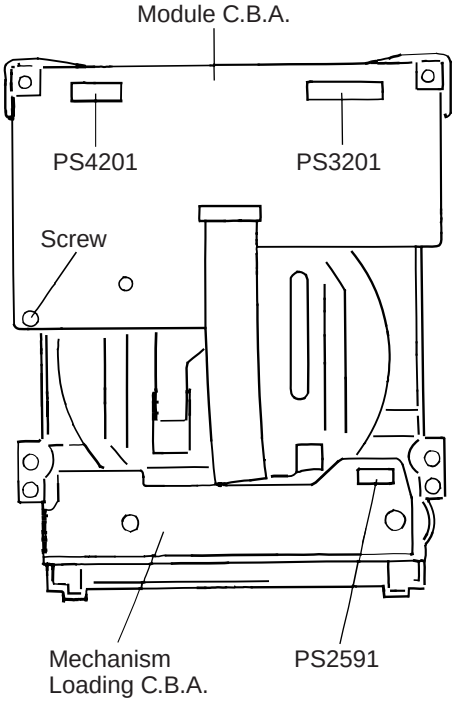

2. Connect the module C.B.A. to the mother C.B.A. extension cables for inspection.
   - Extension cable: AAX16590 (VUC8026)
   - Extension cable: AAX16610 (JGS0116)
     Mother C.B.A. Module C.B.A.
     PP4201-PS4201
     PP3201-PS3201

3. Connect the mechanism loading C.B.A. to the mother C.B.A. with the extension cables for inspection.
   - Extension cable: AAX16600 (VUC8027)
     Mother C.B.A. Mechanism Loading C.B.A.
     PP2591-PS2591

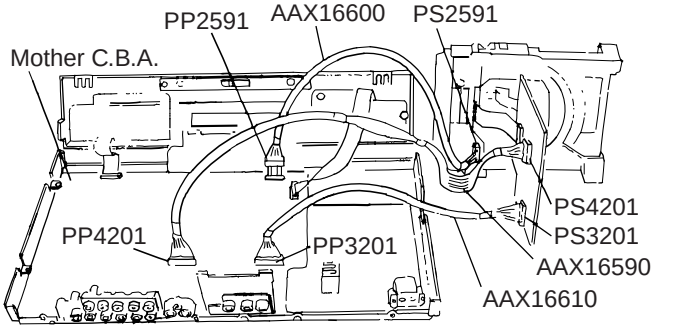

Note

Be sure to initialize the player whenever you replace a C.B.A. (Refer to section 1-9, Initializing the DVD Player.)

9. Disassembling the Rear Panel

1. Remove all of the screws connected to the rear panel. (The number of screws varies according to the model).

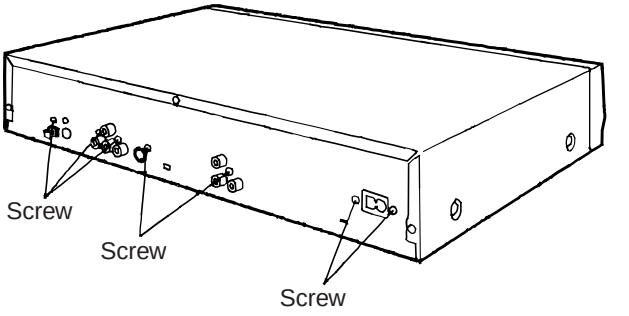

2. Release the two tabs on the left and right.

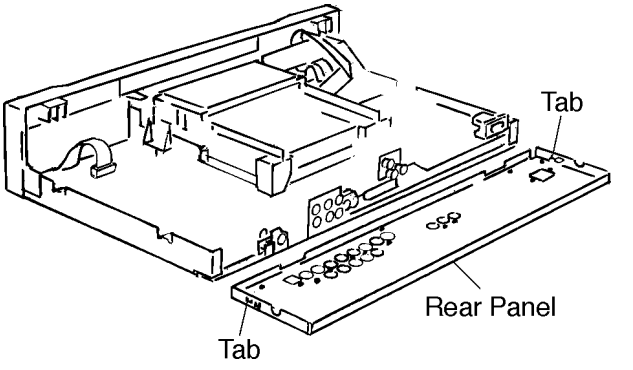

10. Checking the Power Supply C.B.A.

1. Remove the 3 screws.

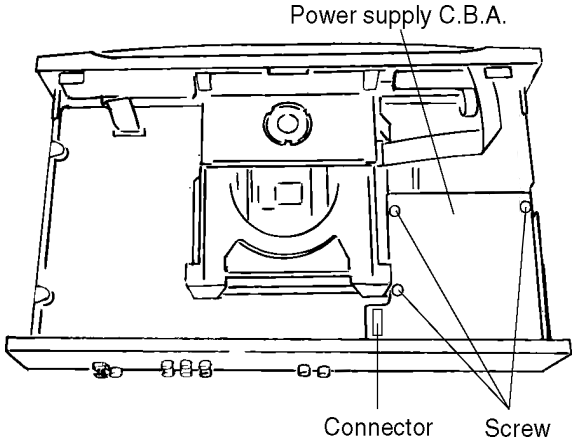

2. Carefully pull out the power supply C.B.A.

Note

There is a danger of damaging the connectors.

3. Connect the power supply C.B.A. and the mother C.B.A. with the extension cable for inspection.
   - Extension cable: TX946360 (JGS0099) (connects the power supply C.B.A. PS1101 and the mother C.B.A. PP1101)

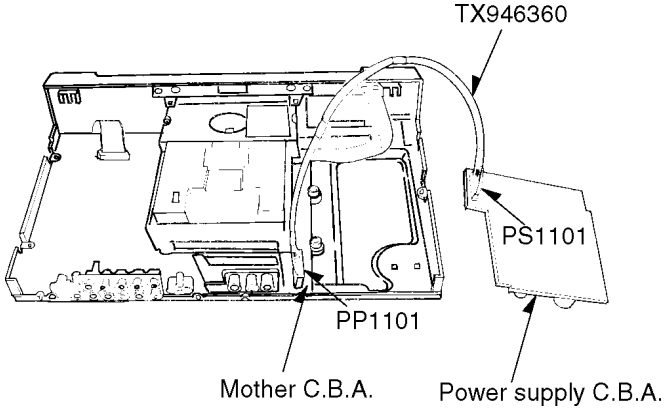

11. Checking the Mother C.B.A.

1. Remove the 4 screws.
2. Release the tab.

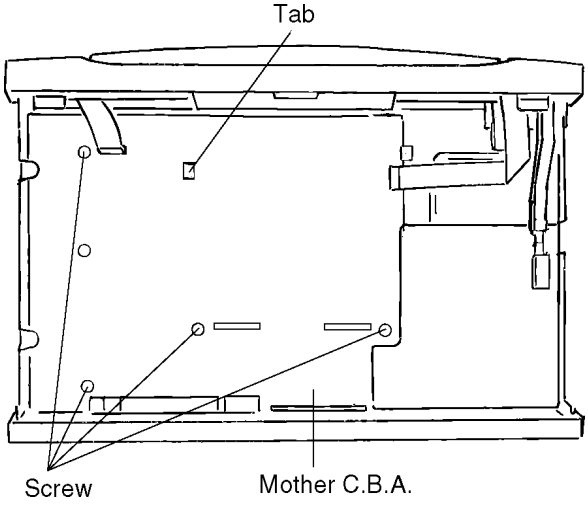

3. Checked by connecting the module C.B.A. and the mother C.B.A. with the extension cables.
   - Extension cable: AAX16590 (VUC8026)
   - Extension cable: AAX16610 (JGS0116)
     Module C.B.A. Mother C.B.A.
     PS3201-PP3201
     PS4201-PP4201

4. Checked by connecting the mechanism loading C.B.A. and the mother C.B.A. with the extension cables.
   - Extension cable: AAX16600 (VUC8027)
     Mechanism loading C.B.A. Mother C.B.A.
     PS2951-PP2591

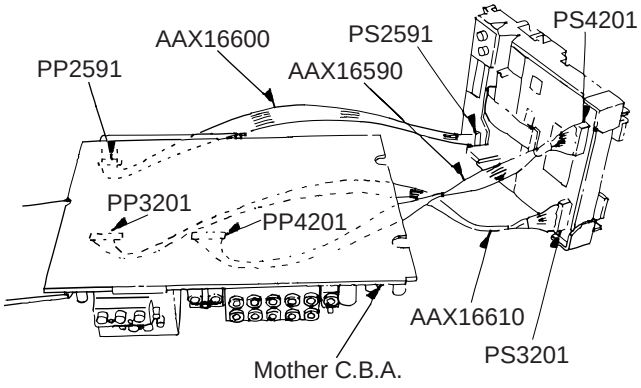

Note

Be sure to intialize the player whenever you replace a C.B.A. (Refer to section 1-9, initializing the DVD player.)

12. Checking the Power Switch C.B.A.

1. Remove the 4 screws.

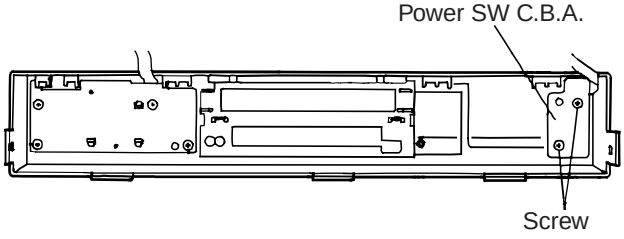

13. Checking the Front Switch C.B.A.

1. Remove the 9 screws.

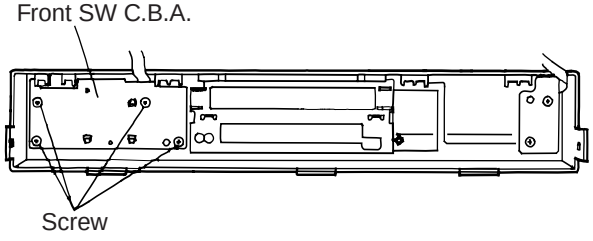

ASSEMBLING AND DISASSEMBLING THE OPTICAL PICKUP (MECHANICAL PARTS)

The optical pickup can be damaged by static electricity from your body. Be sure to take static electricity countermeasures when working around the optical pickup.

1. Handling the Optical Pickup

The optical pickup can be damaged by static electricity from your body. Be sure to take static electricity countermeasures when working around the optical pickup.

1. The optical pickup is an extremely high-precision mechanism. Do not subject it to strong impact.
2. To preserve the quality of the optical pickup replacement parts during transport and installation, the terminals of the laser diode are short-circuited. After replacing the parts, use the proper procedure to return the laser diode to its original condition. (Refer to page 2-11, Assembling the Optical Pickup.)
3. Testers cannot be used to check the laser diode of the optical pickup. The power supply inside the tester can easily damage the laser diode.
4. Take care when handling the flexible cable because excessive force can cause it to break.
5. You cannot adjust the semifixed resistor for laser power adjustment. Do not turn it.

2. Disassembly Procedure

Use the following procedure to replace major parts.
For the assembly procedure, follow the flow chart in reverse.

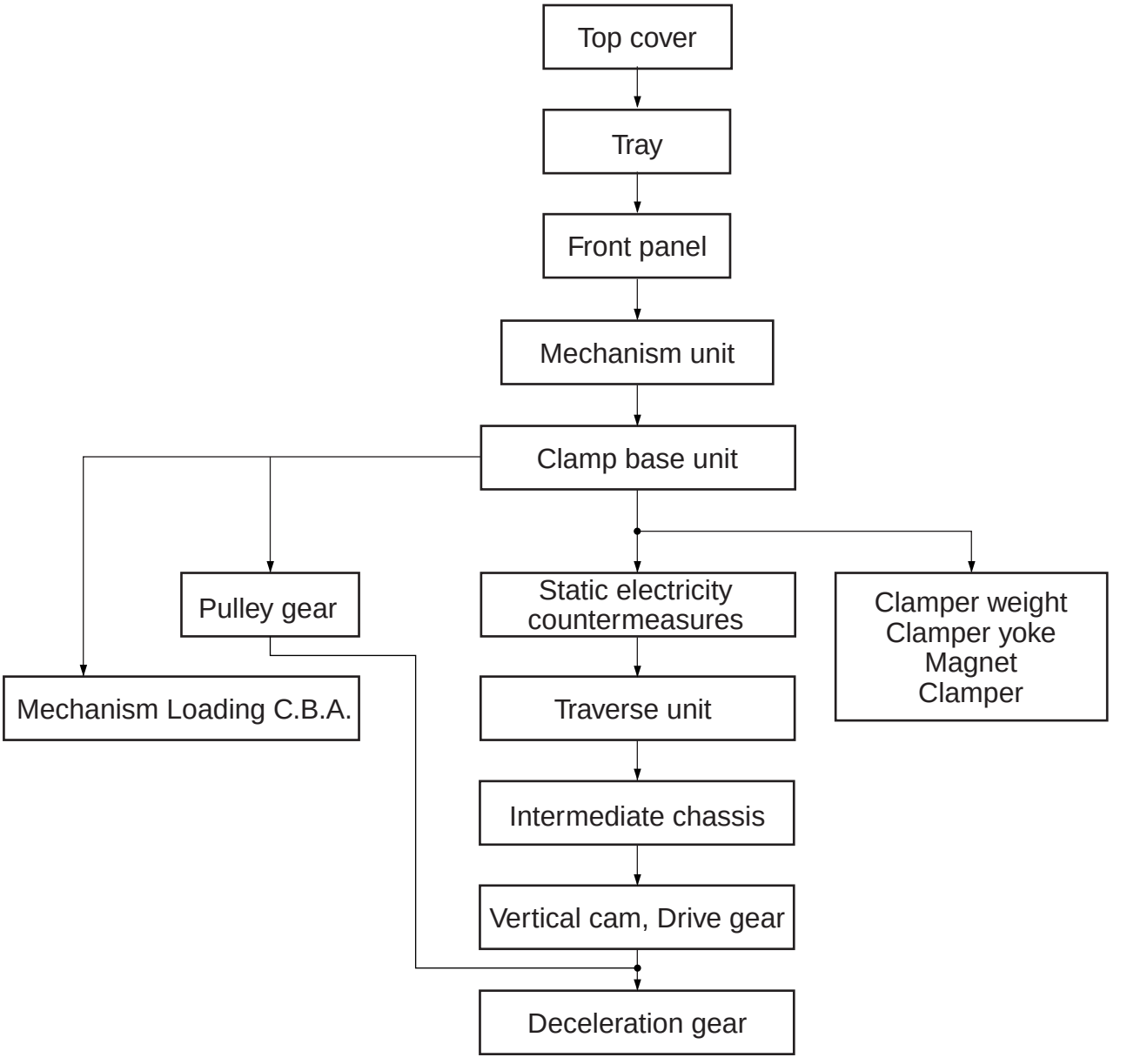

3. Lubricating the Loading Base Unit

When replacing parts, lubricate the parts maked “XXX” in the diagram

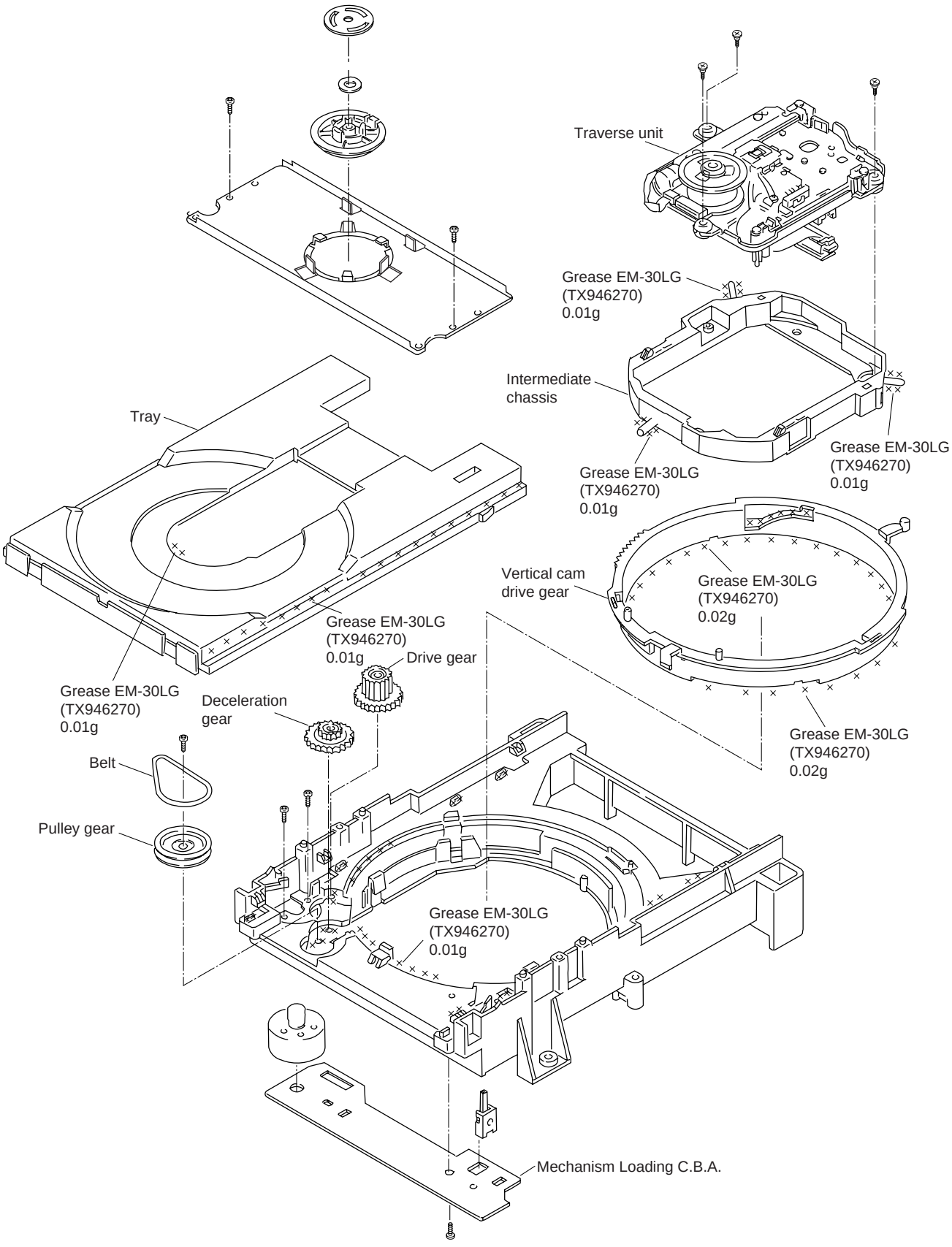

4. Static Electricity Countermeasures

The laser diode inside the traverse unit (optical pickup) can be damaged by static electricity from your body. Be sure to take static electricity countermeasures when working around the optical pickup.

4-1. Static Electricity Countermeasure Methods

1. Ground yourself
   Use an anti-static wrist strap to discharge static electricity from your body.
2. Ground the workbench
   Lay a conductive material (sheet) or steel sheet on the surface where the traverse unit (optical pickup) is to be placed, then ground the sheet.

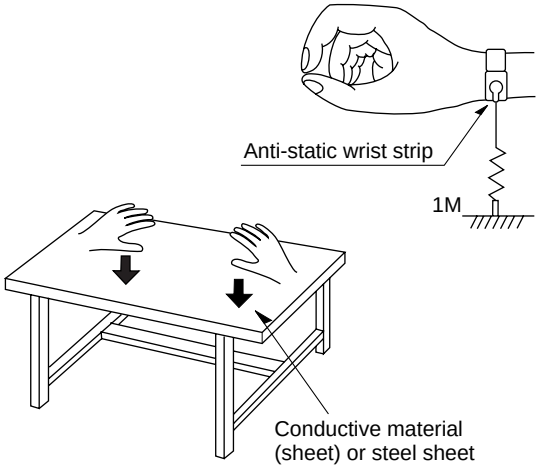

4-2. Short-circuit the laser diode

Solder the land in the flexible cable of the optical pickup.

Notes

- Be sure to do this before disconnecting the flexible cable of the optical pickup from the module C.B.A.
- Use an anti-static soldering iron to short-circuit and unshort-circuit laser diode.
  (Recommended soldering iron: Hakko with ESD countermeasure)
- After you have finished repairing the laser diode, follow the correct procedure to remove the solder from the short-circuit location. (Refer to page 2-7, Assembling and Disassembling the Optical Pickup (Mechanical Parts).)

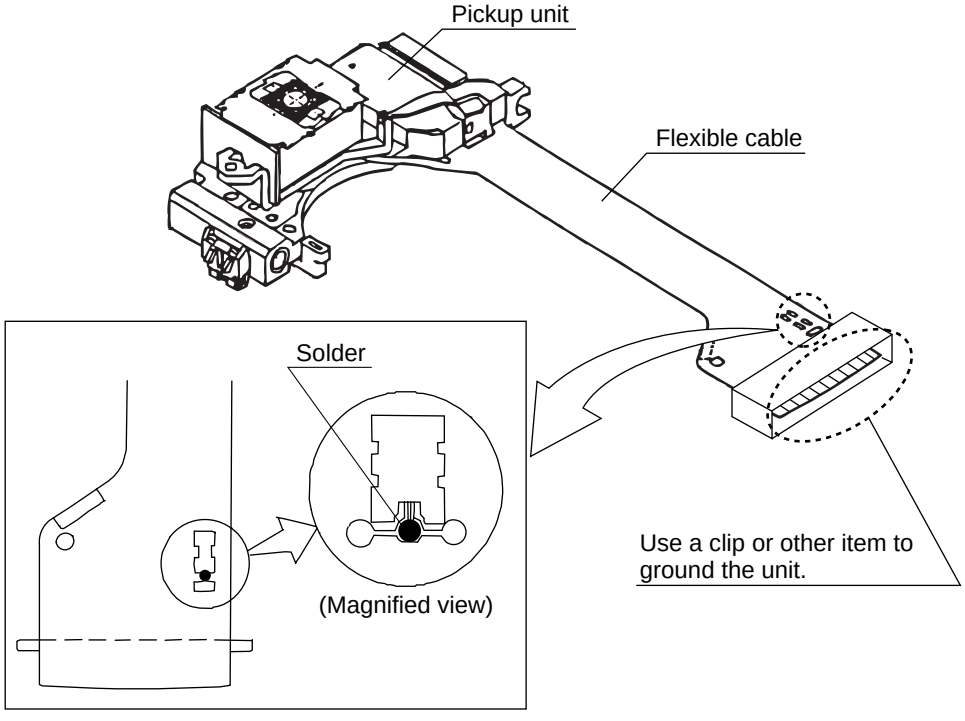

5. Disassembling the Clamp Base Unit

1. Remove the 2 screws.

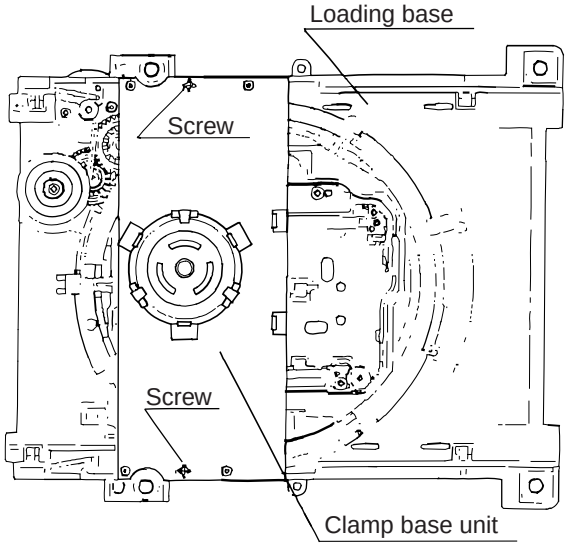

2. Release the 3 tabs on the clamper.

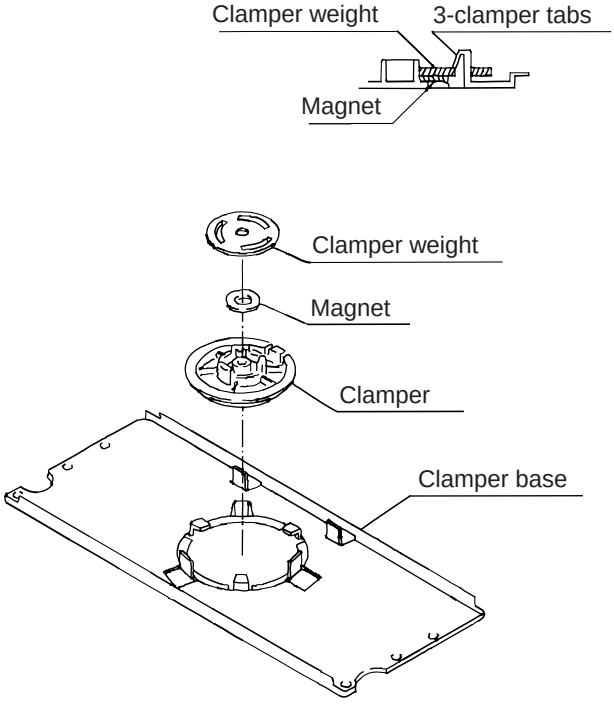

6. Disassembling the Clamper Weight, Clamper Yoke, Magnet and Clamper

1. Remove the tab, and pull out the clamper.

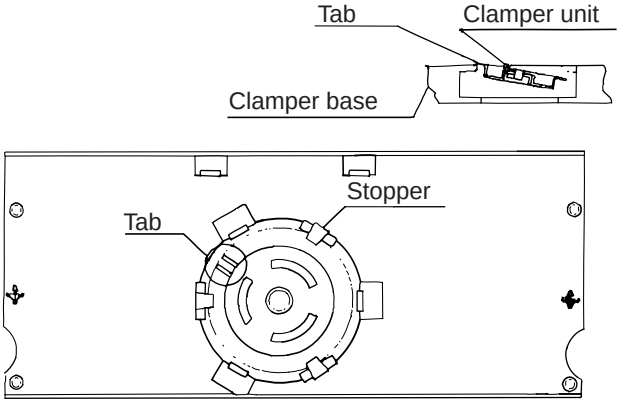

7. Disassembling the Traverse Unit

1. Remove the 3 screws.

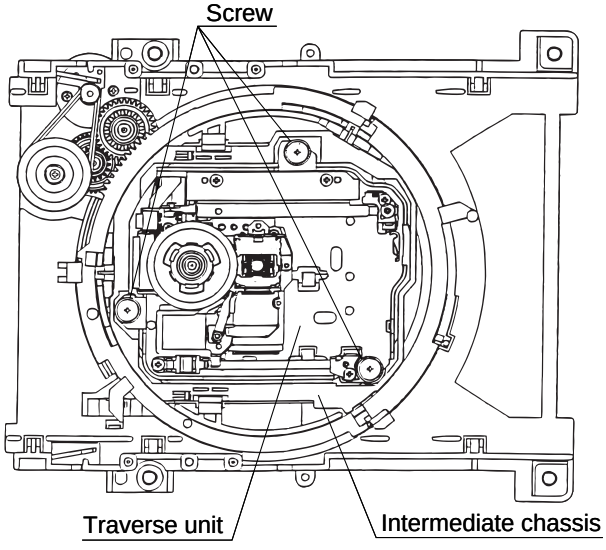

Note

Be sure to take static electricity counterneasures before disconnecting the flexible cable. (Refer to page 2-8, Static Electricity Countermeasures.)

2. Disconnect the 2 flexible cables.

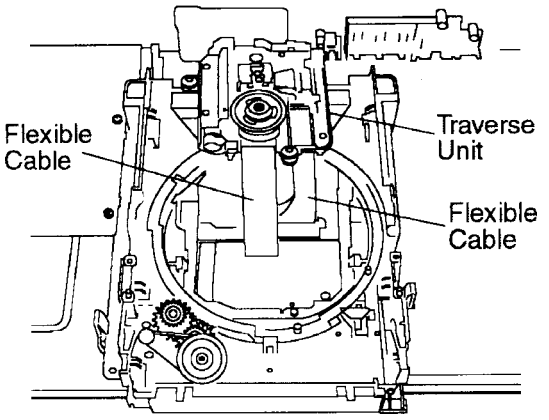

8. Disassembling the Stepping Motor Unit

1. Disconnect the flexible cable.
2. Remove the 2 screws.

Note

Take care when handling the flexible cable bacause it can be broken by excessive force.

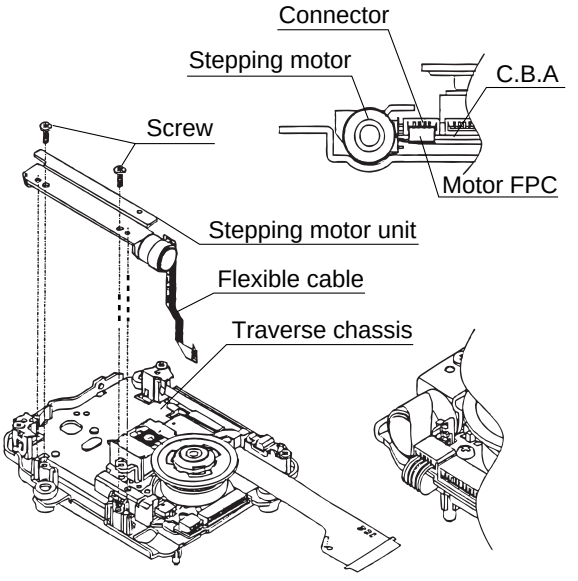

9. Disassembling the Optical Pickup Unit

1. Remove the hook of the FPC holder, then remove the FPC holder itself.
2. Remove the screw.
3. Release the tab, then remove spring holder 1.

Note

Be sure not to lose the spring.

4. Remove the guide shaft.

Note

Be sure to adjust the optical pickup tilt after replacing the optical pickup.
(Refer to page 2-13, Optical Pickup Tilt Adjustment.)

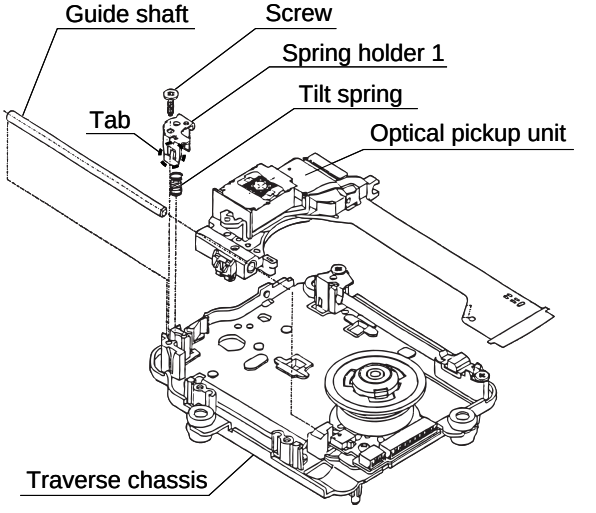

10. Disassembling the Nut Unit

1. Remove the screw.

Notes

- The nut unit is not part of the optical pickup. Before replacing the optical pickup, remove the nut unit for use with the new optical pickup.
- After installation, use screw lock to lock the screw in position.
- When reassembling, use screw lock to lock the screw in position after attaching it.

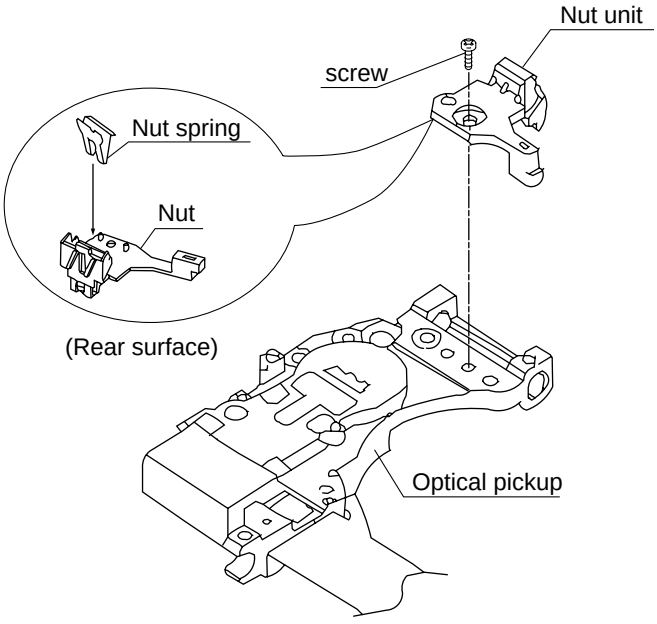

11. Disassembling the Sub-Shaft Preload Spring

1. Remove the screw.

Notes

- Handle the sub-shaft preload spring carefully because the shape of the tip is easily deformed.
- The sub-shaft preload spring is not part of the optical pickup. Before replacing the optical pickup, remove the sub-shaft preload spring for use with the new optical pickup.
- After installation, use screw lock to lock the screw in position.

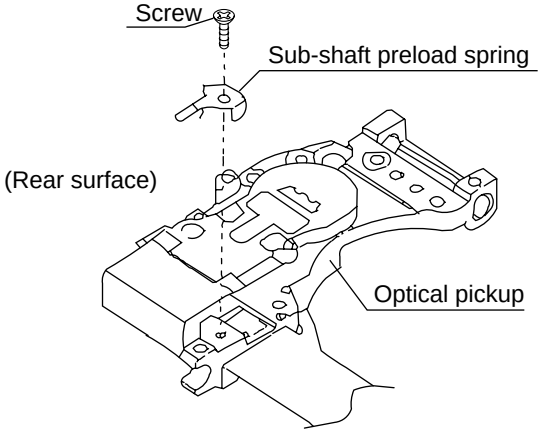

12. Assembling the Optical Pickup

1. Install the optical pickup.

Note

Take care not to attach the tilt spring and guide shaft in the wrong order.

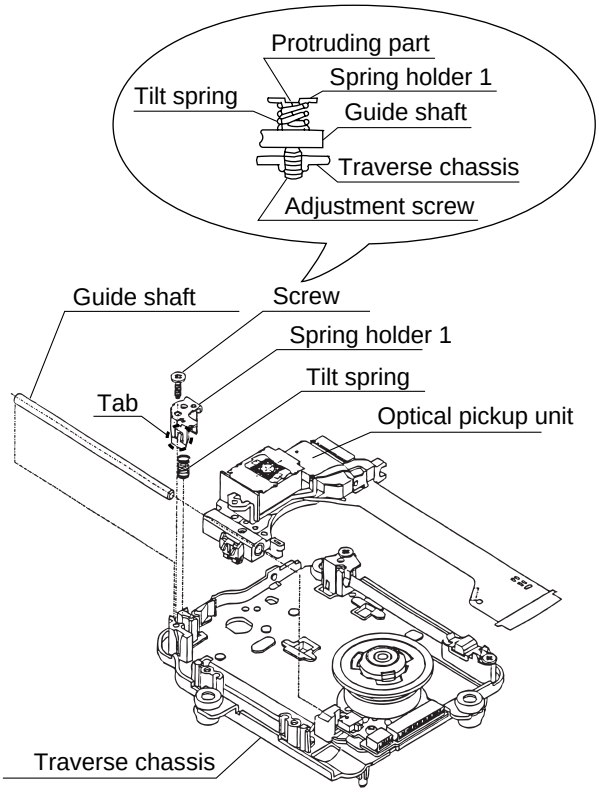

2. Insert the pickup FPC into connector FP5201 on the module C.B.A.

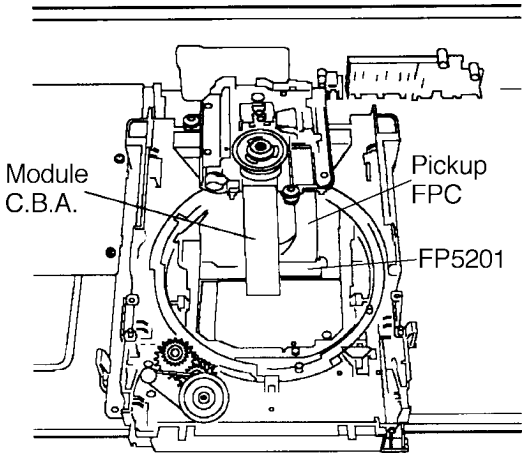

3. Remove the solder from the pickup FPC's soldered short-circuit

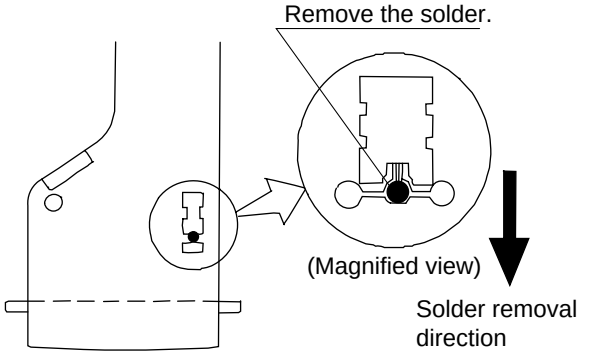

Open the circuit after short-circuiting it.

4. Adjust the optical pickup tilt after removing the solder. (Refer to page 2-13, Optical Pickup Tilt Adjustment.)

5. If installing a new pickup, write the new head current into memory as shown on page 1-6.
   Do this first after turning on the unit with NO disc and while the unit is cold (within the first 3 minutes of power ON), or the jitter reading will not be accurate for the new pickup head.

13. Disassembling the Spring Motor Unit

1. Remove the three screws.

Note

Be sure to adjust the optical pickup tilt after replacing the spindle motor unit.

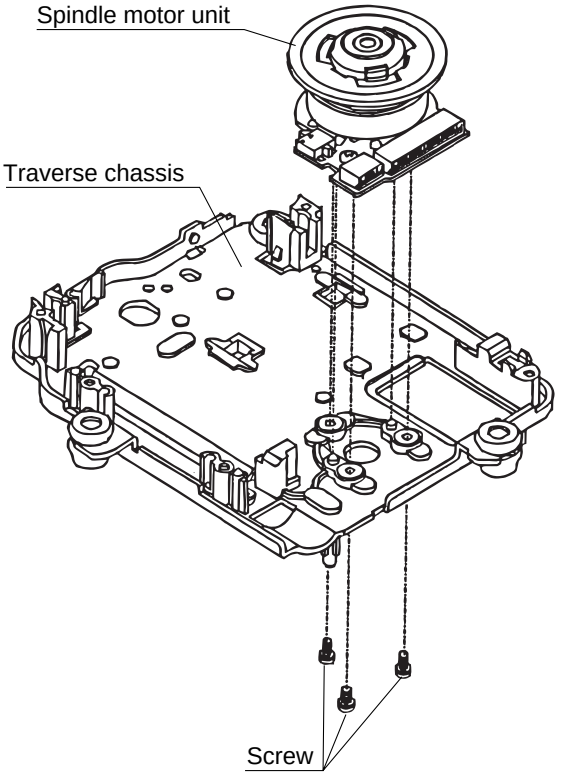

14. Optical Pickup Tilt Adjustment

Measurement point	Adjustment point	Mode	Disc
Main unit service display	Tangential adjustment screw Tilt adjustment screw	T1 (inner periphery) play T2 (outer periphery) play	DVDT-S15 (AAX07320) or DVDT-S01 (TX946080)
Measuring equipment, tools		Adjustment value (JIT 070 to 090 is normal.)	
Hex wrench (part number: TX946380), 1.2mm Screw lock (part number: TX946400)		Adjust to the minimum jitter value.	

(070 = 7% and 090 = 9% jitter.)

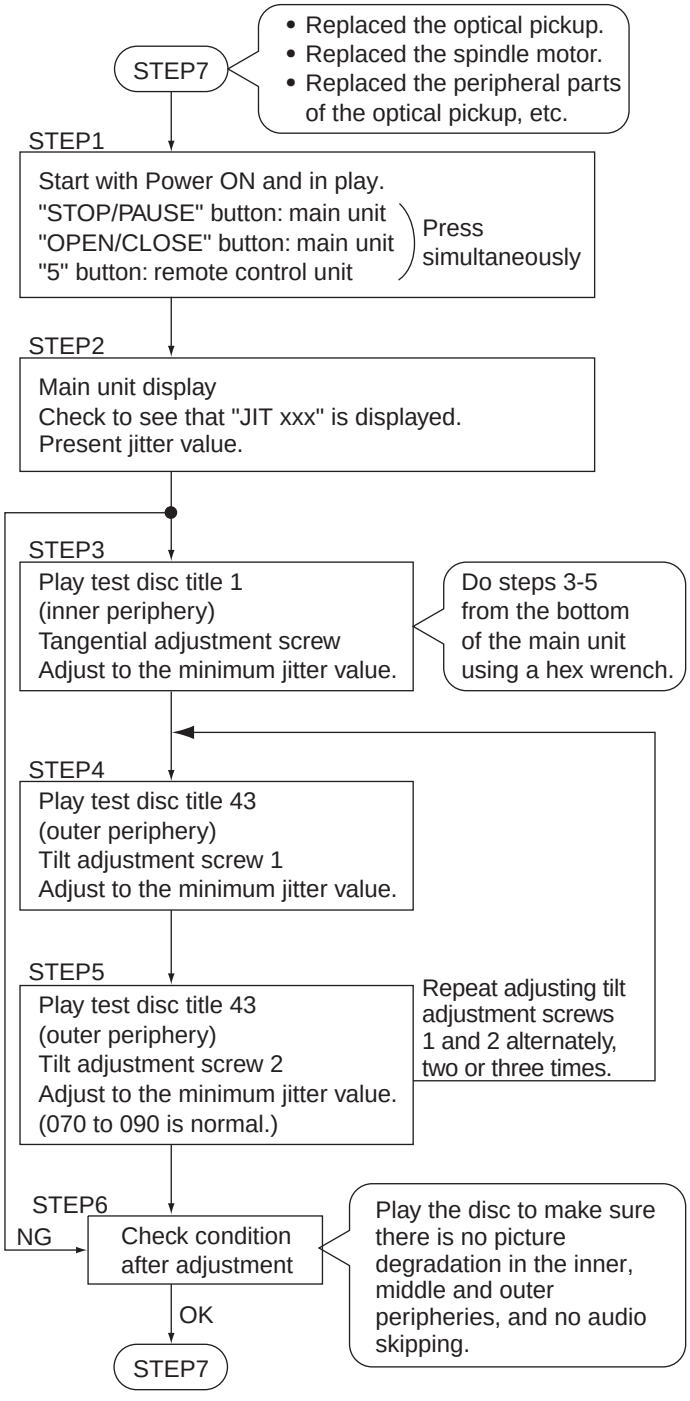

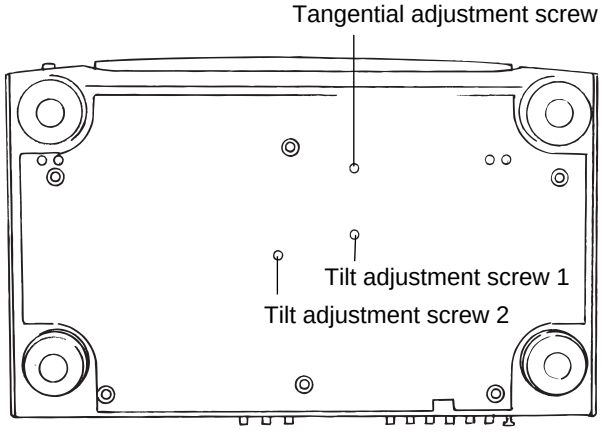

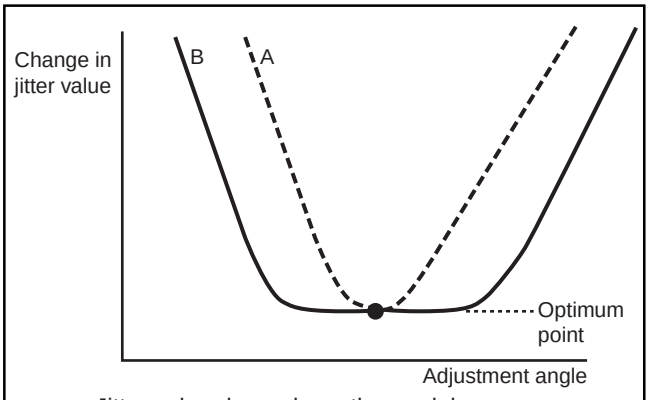

• Jitter value depends on the model:
(1) If the jitter value changes like A, the optimum point is easy to find
(2) If the jitter value changes like B, set the optimum point near the middle.

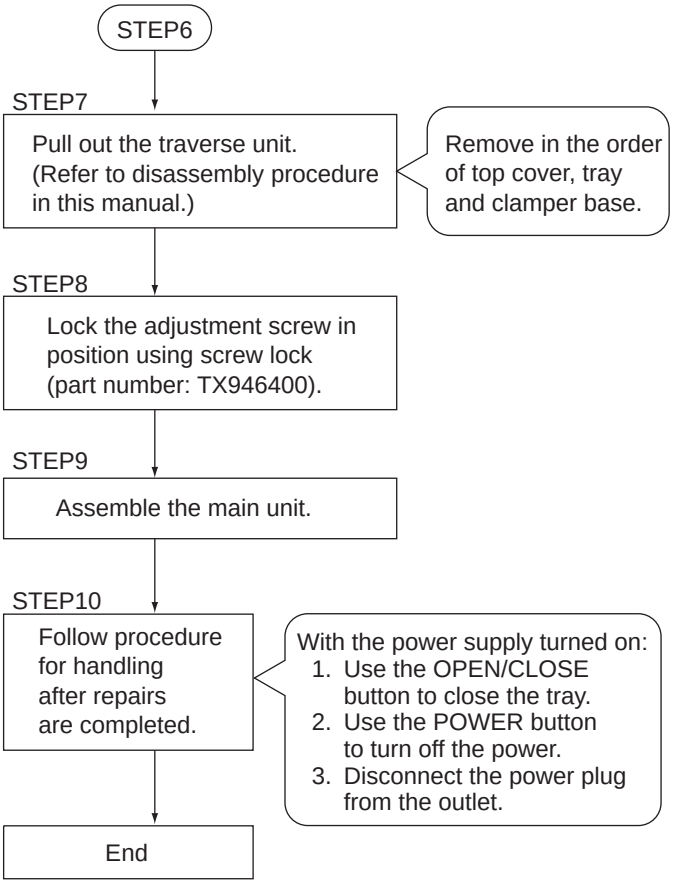

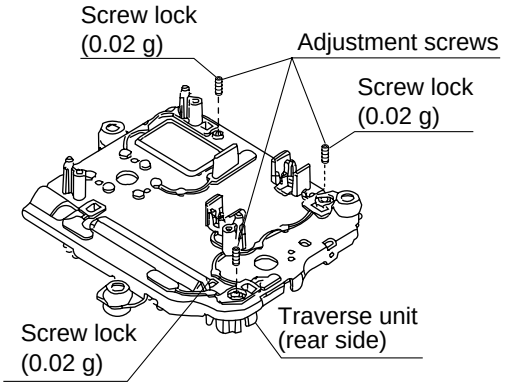

Notes

- Adjustment is generally unnecessary after replacing other parts of the traverse unit. However, adjust if there is a noticeable degradation in picture quality.
- Optical adjustments cannot be made inside the optical pickup.
- Adjustment is generally unnecessary after replacing the traverse unit.

15. Disassembling the Intermediate Chassis

1. Push the stopper downward, then rotate it until it contacts the vertical cam.
2. Release the 2 tabs.

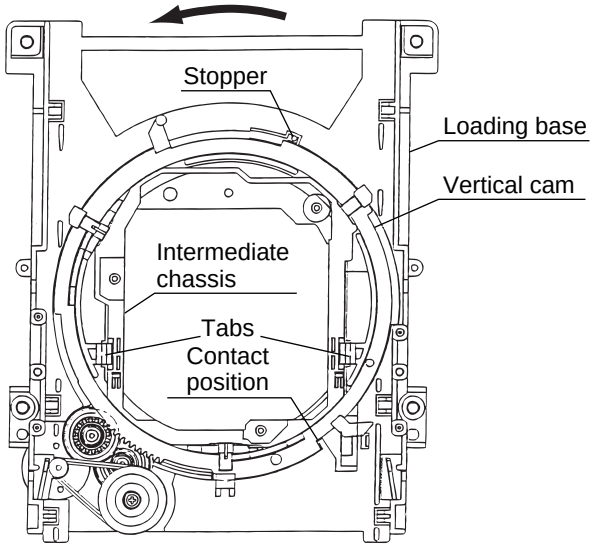

16. Disassembling the Vertical Cam and Drive Gear

1. Rotate the vertical cam until it reaches the contact position.
2. Lift the vertical cam straight upward to pull it out.
2. Remove the Drive gear.

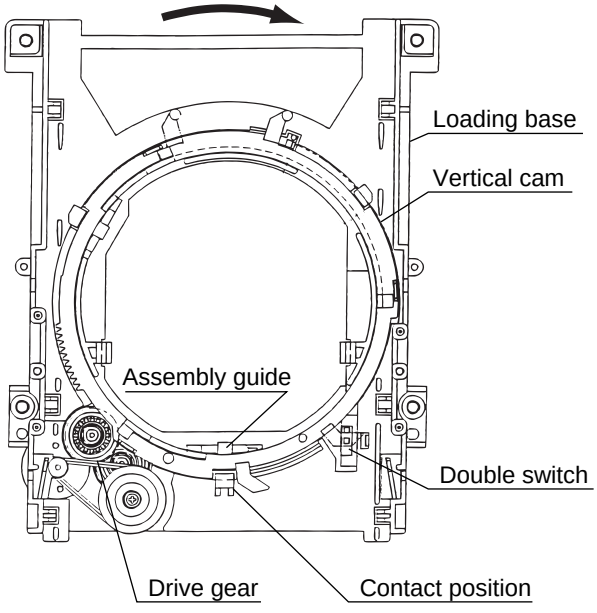

17. Disassembling the Pulley Gear and Deceleration Gear

1. Remove the screw.
2. Remove the pulley gear.
3. Remove the belt.
4. Remove the deceleration gear.

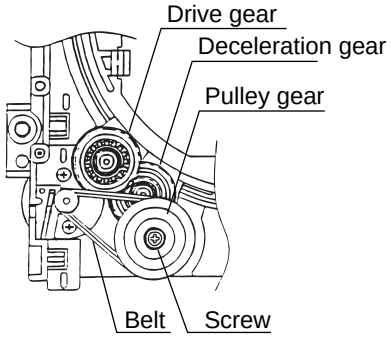

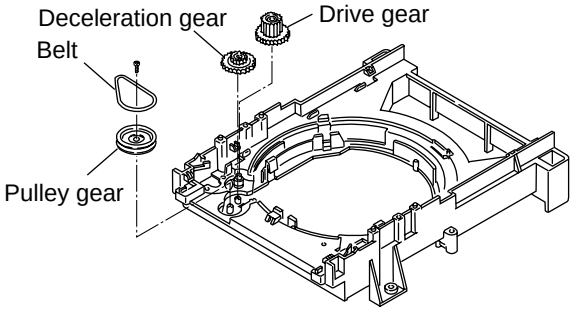

18. Disassembling the Mechanism Loading C.B.A.

1. Remove the 2 screws.

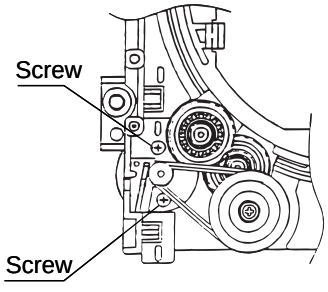

2. Remove the 2 screws.
3. Release the 2 tabs.

(Rear surface)

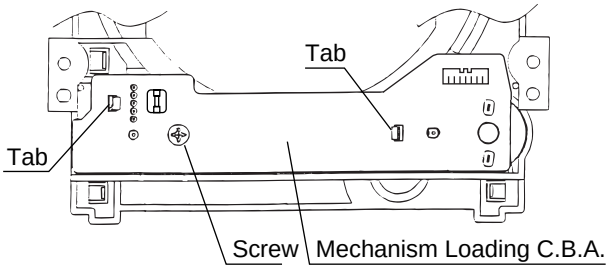

19. Lubricating the Optical Pickup and Peripheral Parts

When replacing parts, lubricate the parts marked “xxx” in the diagram.

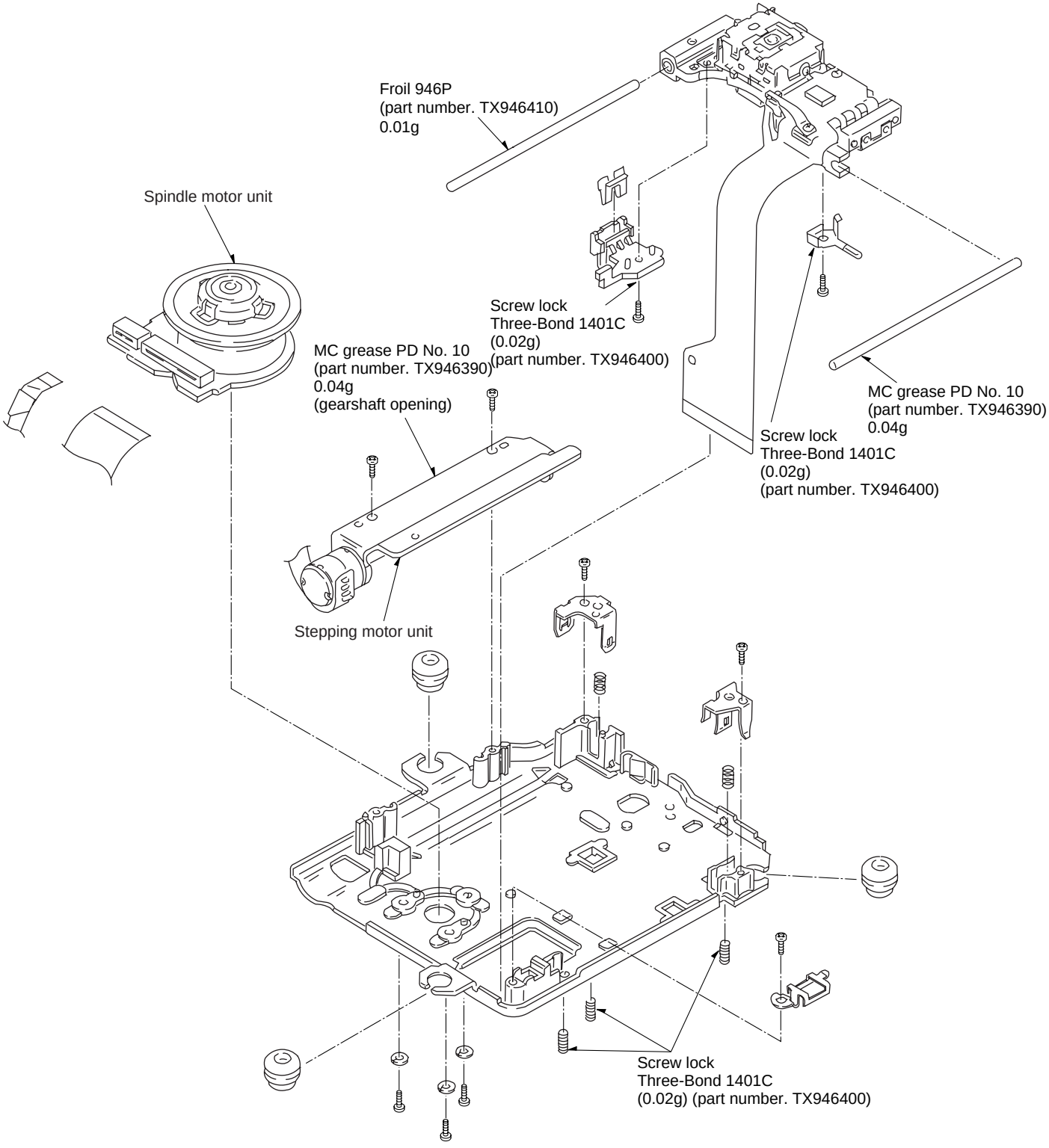

ELECTRICAL CONFIRMATION

1. Video Output (Luminance Signal) Confirmation

Do this confirmation after replacing a C.B.A.

Measurement point	Mode	Disc
Video output terminal	Color bar 75% PLAY (Title 46): DVDT-S15 PLAY (Title 10): DVDT-S01	DVDT-S15 (AAX07320) or DVDT-S01 (TX946080)
Measuring equipment, tools	Confirmation value	
Screwdriver, Oscilloscope 200mV/div, 10 usec/div	1000mVp-p±30mV	

Purpose: To maintain video signal output compatibility.

1. Connect the oscilloscope to the video output terminal and terminate at 75 ohms.
2. Confirm that the luminance signal (Y+S) level is 1000 mVp-p ±30 mV.

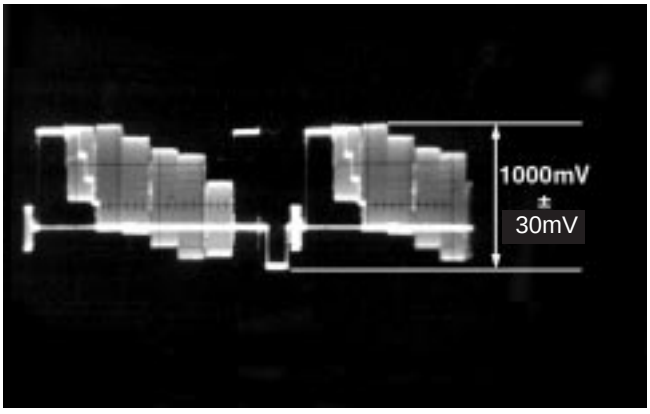

2. Video Output (Chrominance Signal) Confirmation

Do this confirmation after replacing a C.B.A.

Measurement point	Mode	Disc
Video output terminal	Color bar 75% PLAY (Title 46): DVDT-S15 PLAY (Title 10): DVDT-S01	DVDT-S15 (AAX07320) or DVDT-S01 (TX946080)
Measuring equipment, tools	Confirmation value	
Screwdriver, Oscilloscope 200mV/div, 10 usec/div	621mVp-p±13mV	

Purpose: To maintain video signal output compatibility.

1. Connect the oscilloscope to the video output terminal and terminate at 75 ohms.
2. Confirm that the chrominance signal (C) level is 621 mVp-p ±13 mV.

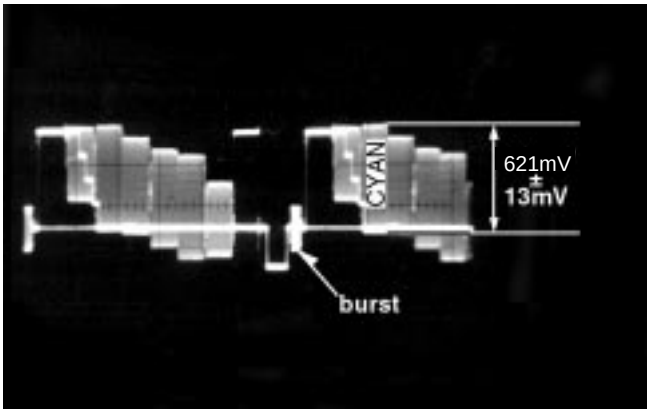

3. Video Component Signal (CB) Output Confirmation

Do this confirmation after replacing a C.B.A.

Measurement point	Mode	Disc
Video output terminal (Y) (CB) Output terminal	Color bar 75% PLAY (Title 46): DVDT-S15 PLAY (Title 10): DVDT-S01	DVDT-S15 (AAX07320) or DVDT-S01 (TX946080)
Measuring equipment, tools	Confirmation value	
Screwdriver, Oscilloscope 100mV/div, 10 usec/div	525mVp-p±11mV (B, A, G Models) 486mVp-p±10mV (U Model)	

Purpose: To maintain video signal output compatibility.

1. Connect the oscilloscope to the video output terminal and terminate at 75 ohms.
2. Apply the trigger at the Y output terminal signal.
3. Confirm that the video component signal (CB) level is 525 mVp-p ±11 mV (B, A, G Models) /486mVp-p ± 10 mV(U Model).

For B, A, G Models

For U Model

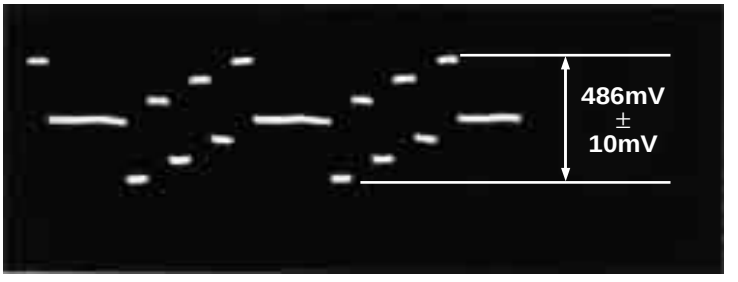

SECTION 3
ABBREVIATIONS

INITIAL/LOGO		ABBREVIATIONS
A	A0~UP	ADDRESS
	ACLK	AUDIO CLOCK
	AD0–UP	ADDRESS BUS
	ADATA	AUDIO PES PACKET DATA
	ALE	ADDRESS LATCH ENABLE
	AMUTE	AUDIO MUTE
	AREQ	AUDIO PES PACKET REQUEST
	ARE	AUDIO RF
	ASI	SERVO AMP INVERTED INPUT
	ASO	SERVO AMP OUTPUT
	ASYNC	AUDIO WORD DISTINCTION SYNC
B	BCK	BIT CLOCK (PCM)
	BCKIN	BIT CLOCK INPUT
	BDO	BLACK DROP OUT
	BLKCK	SUB CODE BLOCK CLOCK
	BOTTOM	CAP. FOR BOTTOM HOLD
	BYP	BYPATH
	BYTCK	BYTE CLOCK
C	CAV	CONSTANT AUGULAS VELOCITY
	CBDO	CAP. BLACK DROP OUT
	CD	COMPACT DISC
	CDSCK	CD SERIAL DATA CLOCK
	CDSRDATA	CD SERIAL DATA
	CDRF	CD RF (EFM) SIGNAL
	CDV	COMPACT DISC-VIDEO
	CHNDATA	CHANNEL DATA
	CKSL	SYSTEM CLOCK SELECT
	CLV	CONSTANT LINEAR VELOCITY
	COFTR	CAP. OFF TRACK
	CPA	CPU ADDRESS
	CPCS	CPU CHIP SELECT
	CPDT	CPU DATA
	CPUADR	CPU ADDRESS LATCH
	CPUADT	CPU ADDRESS DATA BUS
	CPUIRQ	CPU INTERRUPT REQUEST
	CPRD	CPU READ ENABLE
	CPWR	CPU WRITE ENABLE
	CS	CHIP SELECT
	CSYNCIN	COMPOSITE SYNC IN
	CSYNCOUT	COMPOSITE SYNC OUT
D	DACCK	D/A CONVERTER CLOCK
	DEEMP	DEEMPHASIS BIT ON/OFF
	DEMPH	DEEMPHASIS SWITCHING
	DIG0~UP	FL DIGIT OUTPUT
	DIN	DATA INPUT
	DMSRCK	DM SERIAL DATA READ CLOCK
	DMUTE	DIGITAL MUTE CONTROL
	DO	DROP OUT
	DOUT0–UP	DATA OUTPUT
	DRF	DATA SLICE RF (BIAS)
	DRPOUT	DROP OUT SIGNAL
	DREQ	DATA REQUEST
	DRESP	DATA RESPONSE
	DSC	DIGITAL SERVO CONTROLLER
	DSLF	DATA SLICE LOOP FILTER
	DVD	DIGITAL VIDEO DISC

INITIAL/LOGO		ABBREVIATIONS
E	EC	ERROR TORQUE CONTROL
	ECR	ERROR TORQUE CONTROL REFERENCE
	ENCSEL	ENCODER SELECT
	ETMCLK	EXTERNAL M CLOCK (81MHz/40.5MHz)
	ETSCLK	ETSCLK EXTERNAL S CLOCK (54MHz)
F	FBALFCLK	FOCUS BALANCEFRAME CLOCK
	FE	FOCUS ERROR
	FFI	FOCUS ERROR AMP INVERTED INPUT
	FEO	FOCUS ERROR AMP OUTPUT
	FG	FREQUENCY GENERATOR
	FSC	FREQUENCY SUB CARRIER
	FSCK	FS (384 OVER SAMPLING) CLOCK
G	GND	COMMON GROUNDING (EARTH)
H	HA0–UP	HOST ADDRESS
	HD0–UP	HOST DATA
	HINT	HOST INTERRUPT
	HRXW	HOST READ/WRITE
I	IECOUT	IEC958 FORMAT DATA OUTPUT
	IPFRAG	INTERPORATION FLAG
	IREF	I (CURRENT) REFERENCE
	ISEL	INTERFACE MODE SELECT
L	LDONL	LASER DIODE CONTROL
	LPC	LASER POWER CONTROL
	LRCK	L CH/R CH DISTINCTION CLOCK
M	MA0–UP	MEMORY ADDRESS
	MCK	MEMORY CLOCK
	MCKI	MEMORY CLOCK INPUT
	MCLK	MEMORY SERIAL COMMAND CLOCK
	MDQ0–UP	MEMORY SERIAL COMMAND DATA
	MDQM	MEMORY DATA INPUT/OUTPUT
	MLD	MEMORY DATA I/O MASK
	MPEG	MEMORY SERIAL COMMAND LOAD MOTION PICTURE IMAGE CODING EXPERT GROUP
O	ODC	OPTICAL DISC CONTROLLER
	OFTR	OFF TRACKING
	OSCI	OSCILLATOR INPUT
	OSCO	OSCILLATOR OUTPUT
	OSD	ON SCREEN DISPLAY
P	P1~UP	PORT
	PCD	CD TRACKING PHASE DIFFERENCE
	PCK	PLL CLOCK
	PDVD	DVD TRACKING PHASE DIFFERENCE
	PEAK	CAP. FOR PEAK HOLD
	PLLCLKPLLO	CHANNEL PLL CLOCK
	K	PLL LOCK
	PWMCTL	PWM OUTPUT CONTROL
	PWMDA	PULSE WAVE MOTOR DRIVE A
	PWMOA, B	PULSE WAVE MOTOR OUT A, B

INITIAL/LOGO		ABBREVIATIONS
R	RE	READ ENABLE
	RFENV	RF ENVELOPE
	RFO	RF PHASE DIFFERENCE OUTPUT
	RS	(CD-ROM) REGISTER SELECT
	RSEL	PF POLARITY SELECT
	RST	RESET
	RSV	RESERVE
S	SBI0, 1	SERIAL DATA INPUT
	SBO0	SERIAL DATA OUTPUT
	SBT0, 1	SERIAL CLOCK
	SCK	SERIAL DATA CLOCK
	SCKR	AUDIO SERIAL CLOCK RECEIVER
	SCL	SERIAL CLOCK
	SCLK	SERIAL CLOCK
	SDA	SERIAL DATA
	SEG0–UP	FL SEGMENT OUTPUT
	SELCLK	SELECT CLOCK
	SEN	SERIAL PORT ENABLE
	SIN1, 2	SERIAL DATA IN
	SOUT1, 2	SERIAL DATA OUT
	SPDI	SERIAL PORT DATA INPUT
	SPDO	SERIAL PORT DATA OUTPUT
	SPEN	SERIAL PORT R/W ENABLE
	SPRCLK	SERIAL PORT READ CLOCK
	SPWCLK	SERIAL PORT WRITE CLOCK
	SQCK	SUB CODE Q CLOCK
	SQCX	SUB CODE Q DATA READ CLOCK
	SRDATA	SERIAL DATA
	SRMADR	SRAM ADDRESS BUS
	SRMDT0–7	SRAM DATA BUS 0–7
	SS	START/STOP
	STAT	STATUS
	STCLK	STREAM DATA CLOCK
	STD0–UP	STREAM DATA
	STENABLE	STREAM DATA INPUT ENABLE
	STSEL	STREAM DATA POLARITY SELECT
	STVALID	STREAM DATA VALIDITY
	SUBC	SUB CODE SERIAL
	SBCK	SUB CODE CLOCK
	SUBQ	SUB CODE Q DATA
	SYSCLK	SYSTEM CLOCK
T	TE	TRACKING ERROR
	TIBAL	BALANCE CONTROL
	TID	BALANCE OUTPUT 1
	TIN	BALANCE INPUT
	TIP	BALANCE INPUT
	TIS	BALANCE OUTPUT 2
	TPSN	OP AMP INPUT
	TPSO	OP AMP OUTPUT
	TPSP	OP AMP INVERTED INPUT
	TRCRS	TRACK CROSS SIGNAL
	TRON	TRACKING ON
	TRSON	TRAVERSE SERVO ON

INITIAL/LOGO		ABBREVIATIONS
V	VBLANK	V BLANKING
	VCC	COLLECTOR POWER SUPPLY VOLTAGE
	VCDCONT	VIDEO CD CONTROL (TRACKING BALANCE)
	VDD	DRAIN POWER SUPPLY VOLTAGE
	VFB	VIDEO FEED BACK
	VREF	VOLTAGE REFERENCE
	VSS	SOURCE POWER SUPPLY VOLTAGE
W	WAIT	BUS CYCLE WAIT
	WDCK	WORD CLOCK
	WEH	WRITE ENABLE HIGH
	WSR	WORD SELECT RECEIVER
X	X	X' TAL
	XALE	X ADDRESS LATCH ENABLE
	XAREQ	X AUDIO DATA REQUEST
	XCDROM	X CD ROM CHIP SELECT
	XCS	X CHIP SELECT
	XCSYNC	X COMPOSITE SYNC
	XDS	X DATA STROBE
	XHSYNCO	X HORIZONTAL SYNC OUTPUT
	XHINT	XH INTERRUPT REQUEST
	XI	X' TAL OSCILLATOR INPUT
	XINT	X INTERRUPT
	XMW	X MEMORY WRITE ENABLE
	XO	X' TAL OSCILLATOR OUTPUT
	XRE	X READ ENABLE
	XSRMCE	X SRAM CHIP ENABLE
	XSRMOE	X SRAM OUTPUT ENABLE
	XSRMWE	X SRAM WRITE ENABLE
	XVCS	X V-DEC CHIP SELECT
	XVDS	X V-DEC CONTROL BUS STROBE
	XVSYNCO	X VERTICAL SYNC OUTPUT

BLOCK DIAGRAM

1. OVERALL BLOCK DIAGRAM

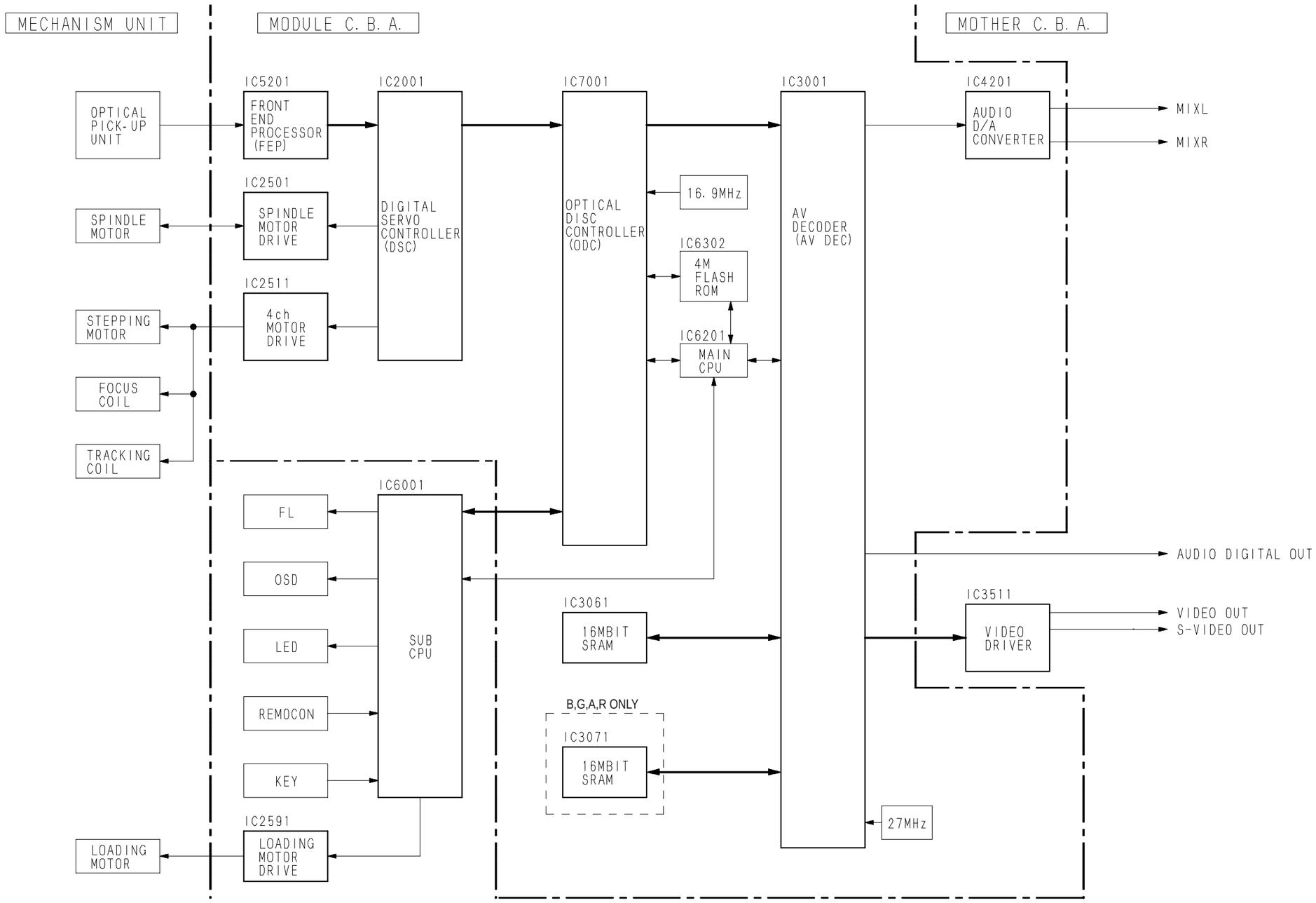

2. SERVO BLOCK DIAGRAM

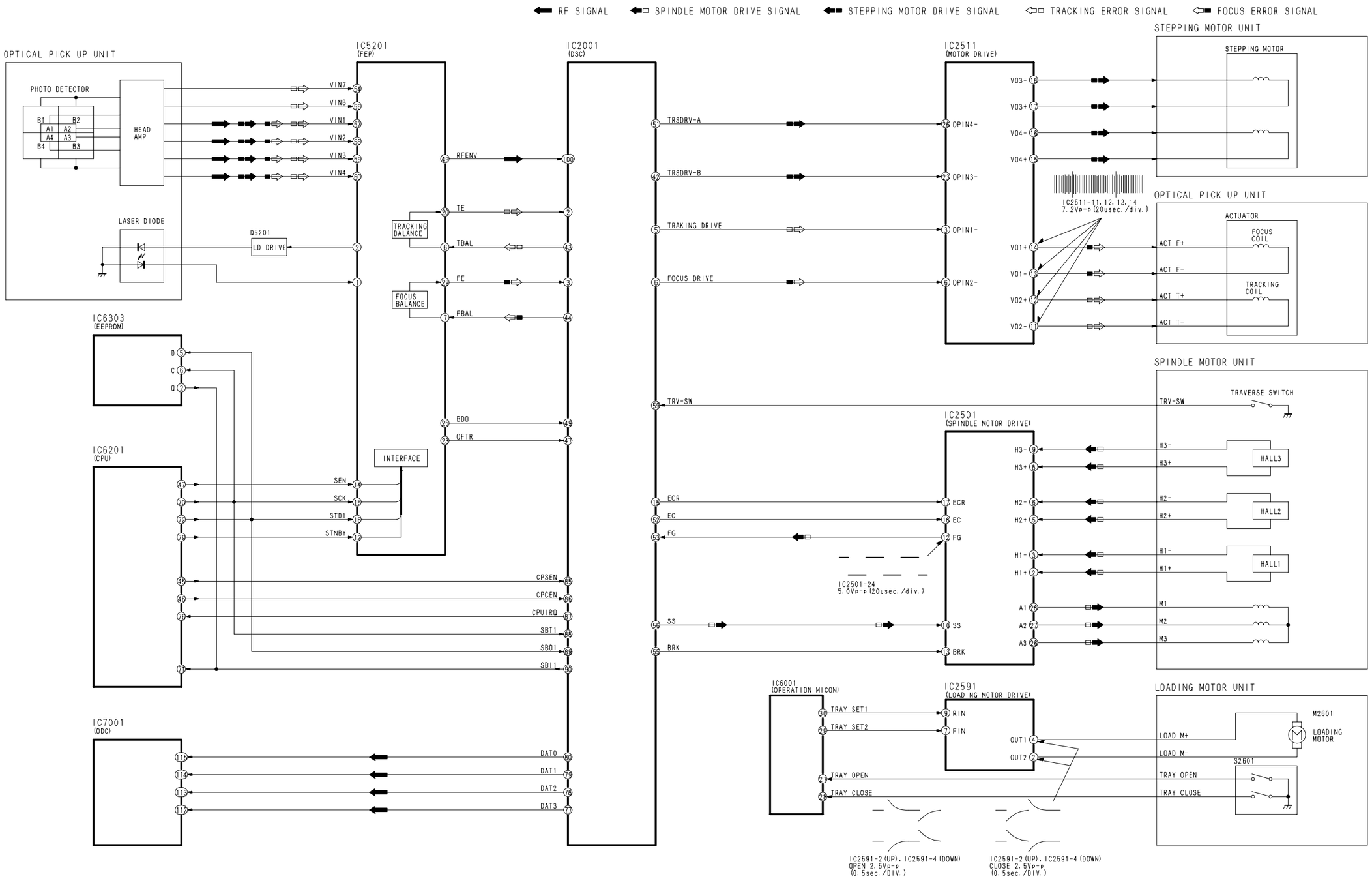

3. VIDEO BLOCK DIAGRAM (FOR U, A, R MODELS)

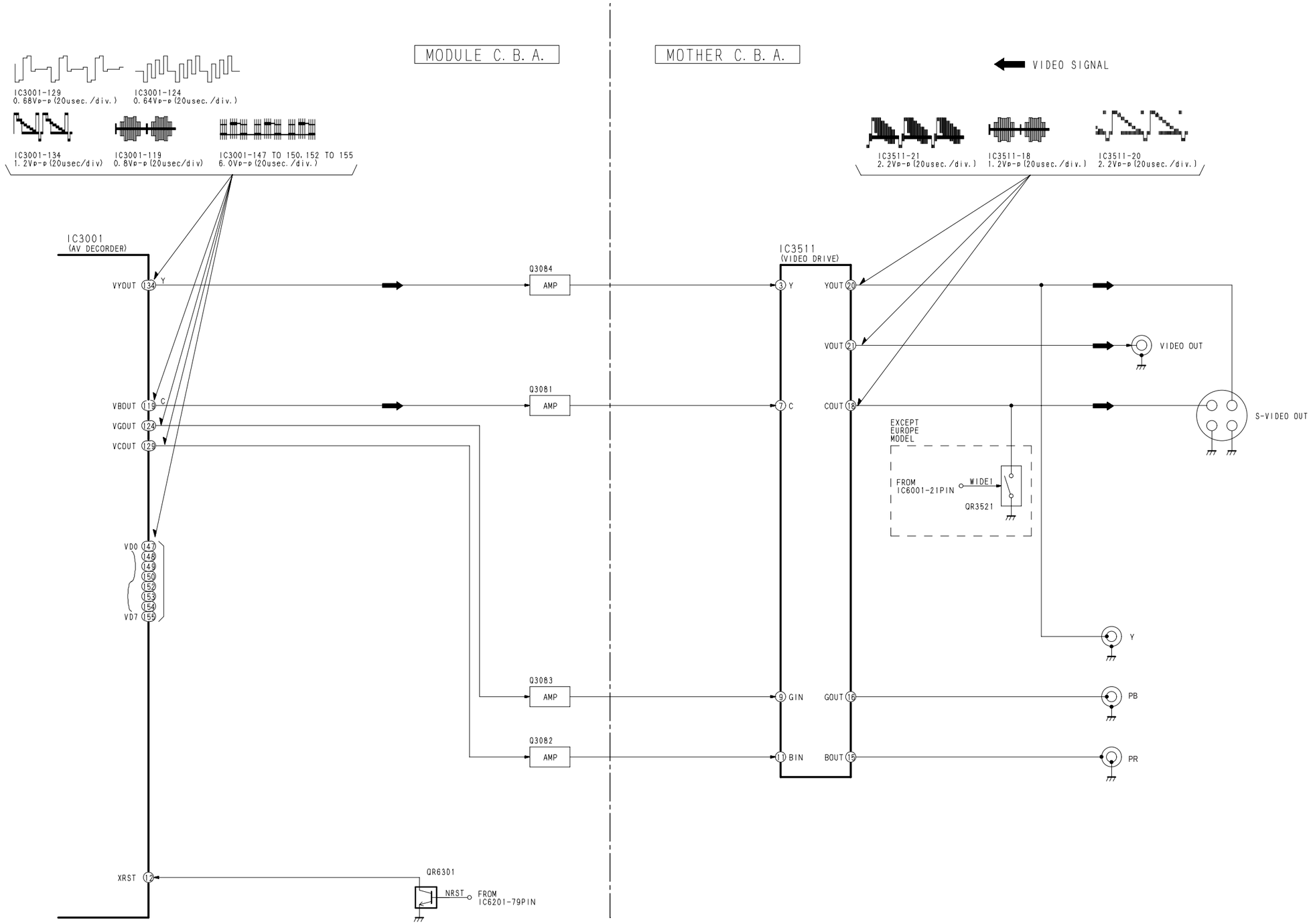

4. VIDEO BLOCK DIAGRAM (FOR G, B MODELS)

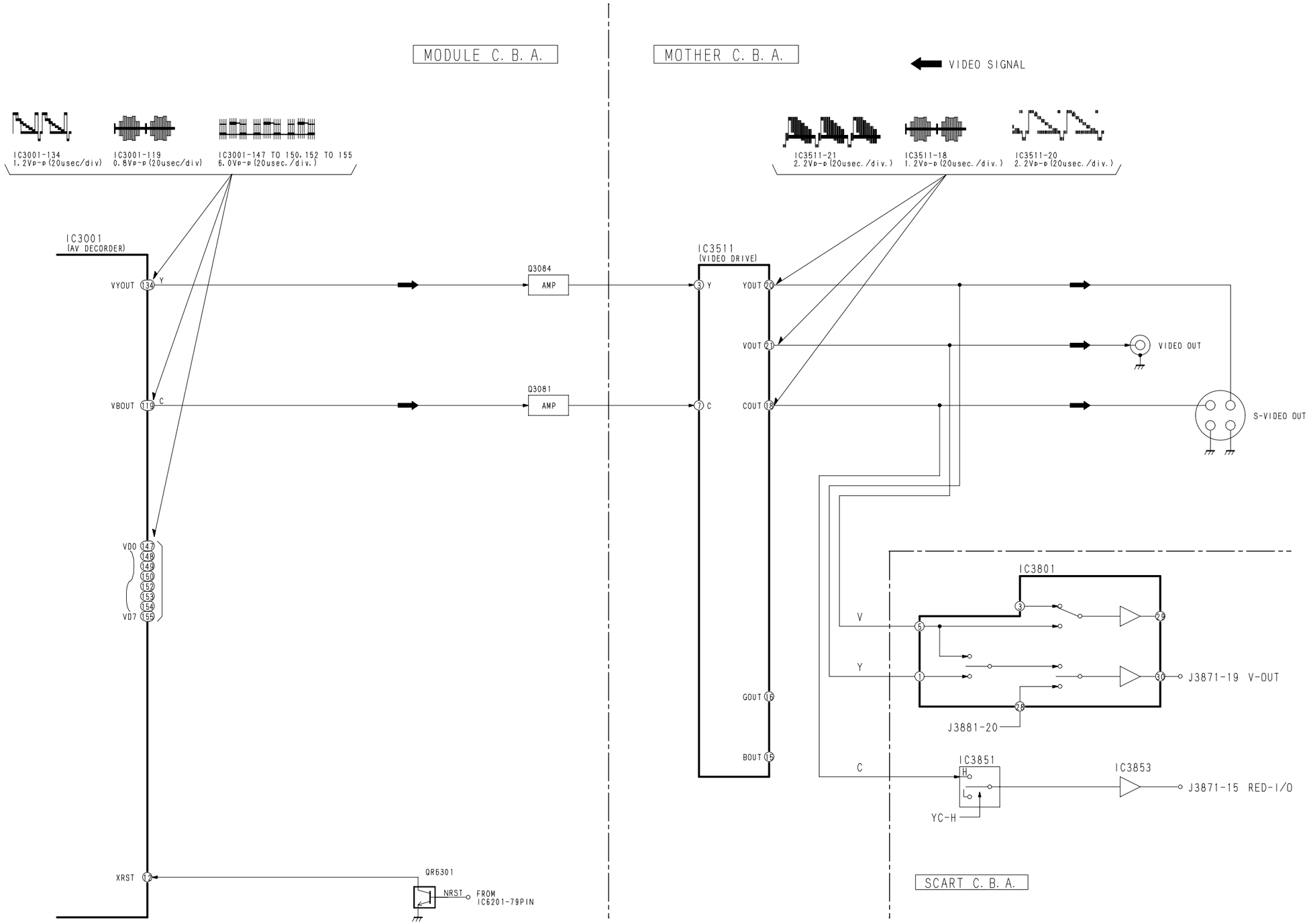

5. AUDIO BLOCK DIAGRAM

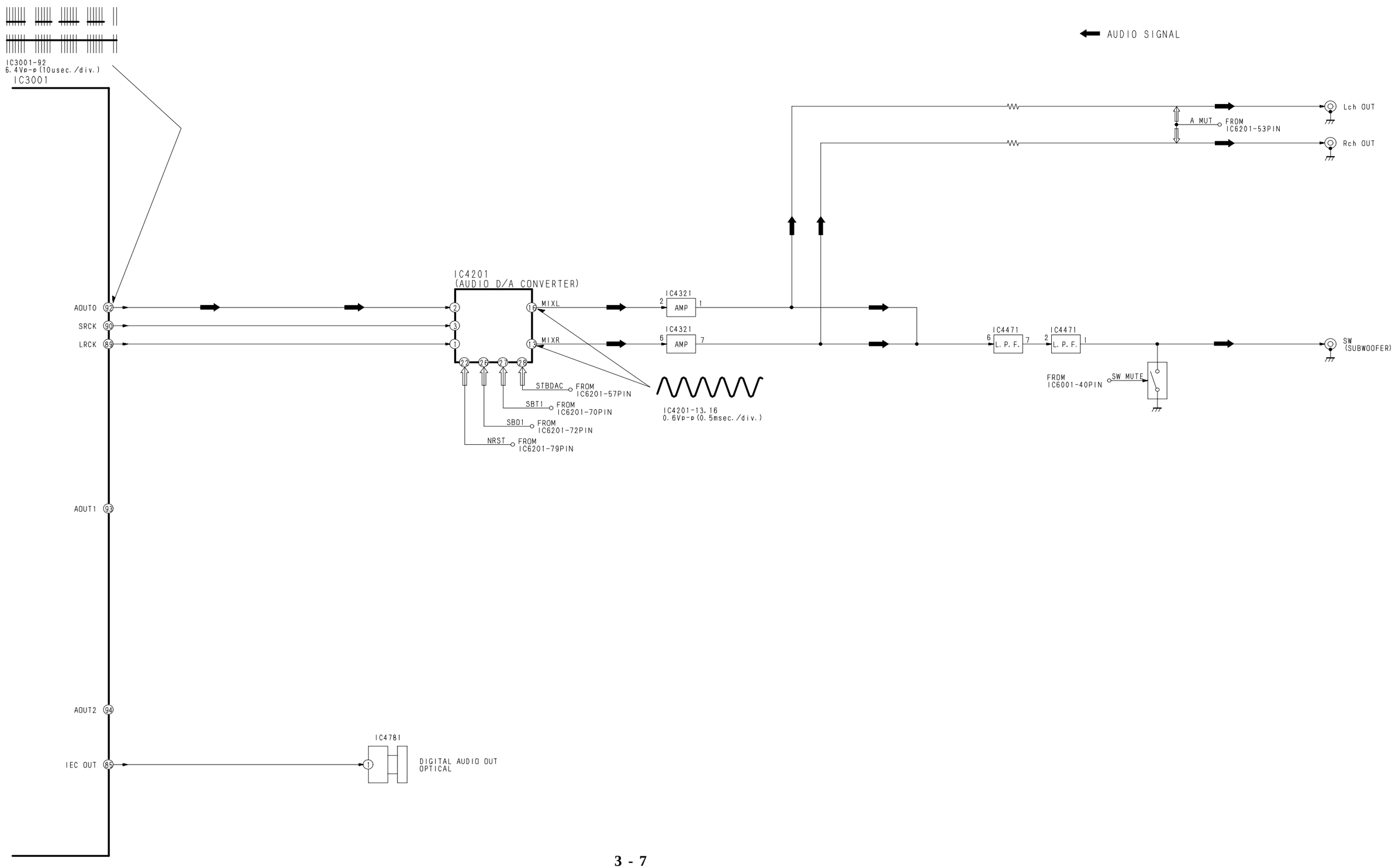

INTER CONNECTION DIAGRAM

1. U, A, R MODELS

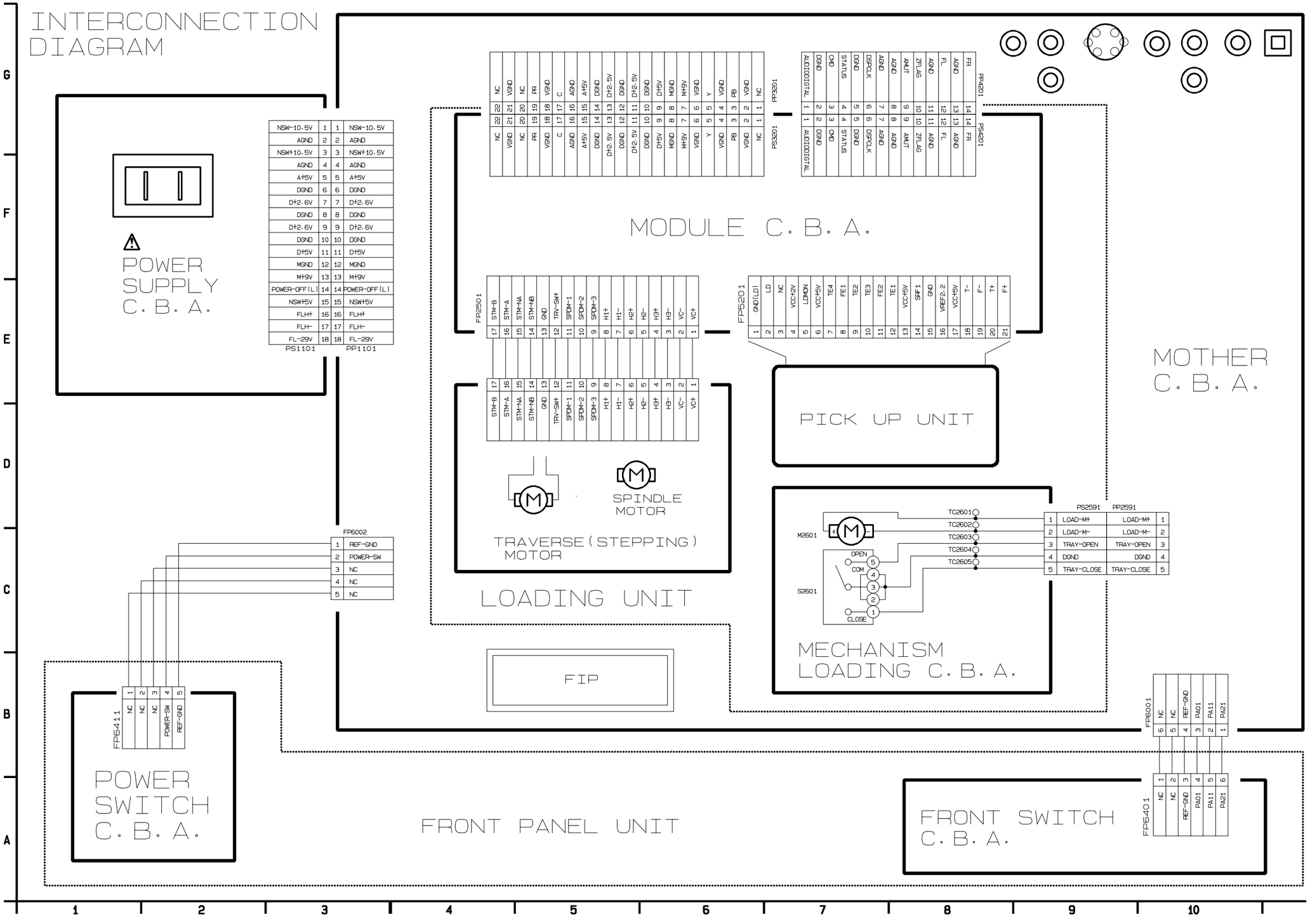

2. G, B MODELS

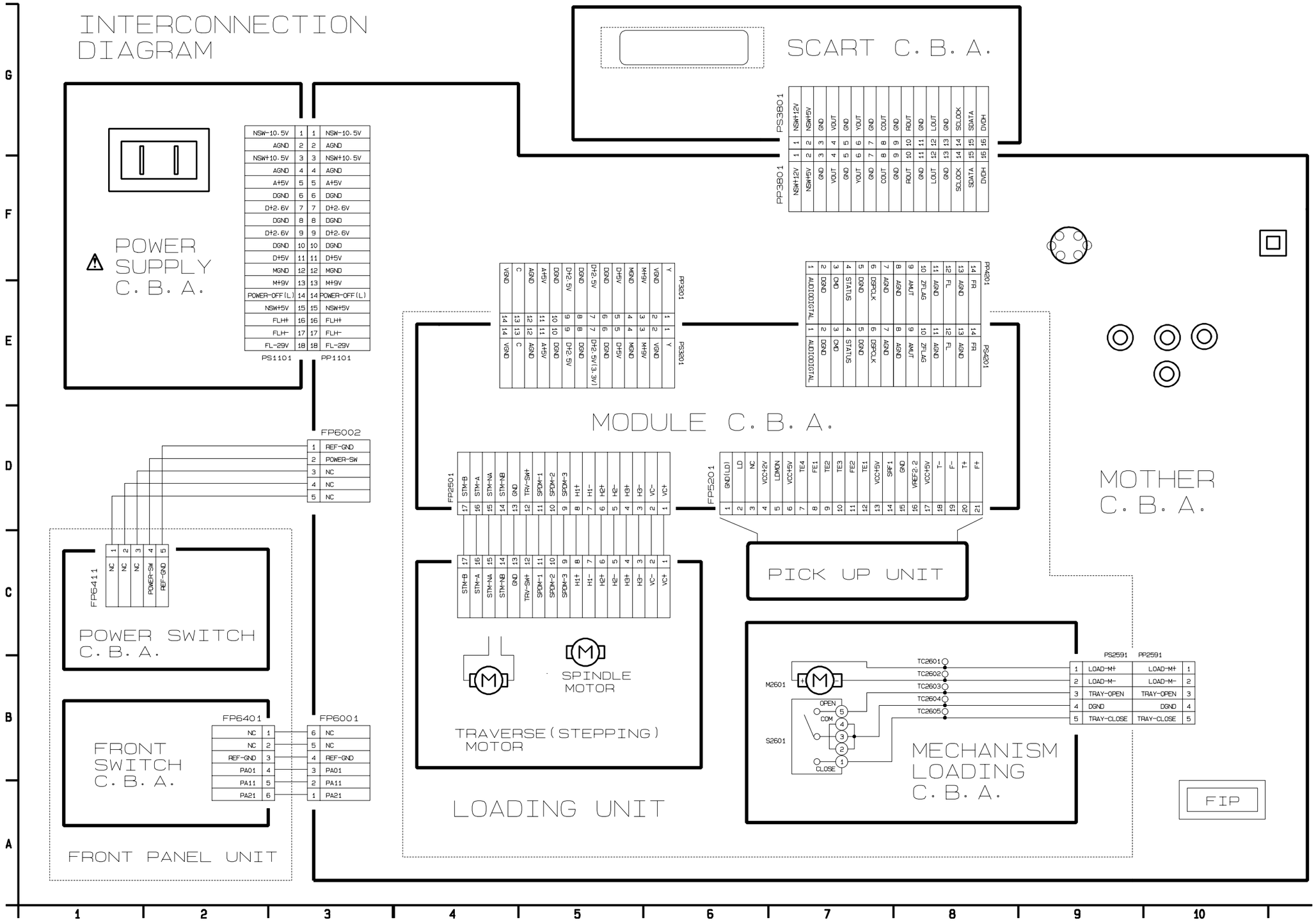
INTERCONNECTION DIAGRAM
SCART C. B. A.
PP3801
PS3801
POWER SUPPLY C. B. A.
PS1101
PP1101
FP6002
FP6411
POWER SWITCH C. B. A.
FRONT SWITCH C. B. A.
FP6401
FP6001
FRONT PANEL UNIT
FP3201
PS3201
PP4201
PS4201
MODULE C. B. A.
FP2501
FP5201
PICK UP UNIT
MOTHER C. B. A.
SPINDLE MOTOR
TRAVERSE (STEPPING) MOTOR
LOADING UNIT
M2601
S2601
OPEN
COM
CLOSE
TC2601
TC2602
TC2603
TC2604
TC2605
PS2591
PP2591
MECHANISM LOADING C. B. A.
FIP

SCHEMATIC DIAGRAM

1. POWER SUPPLY SCHEMATIC DIAGRAM (FOR U MODEL)

U MODEL

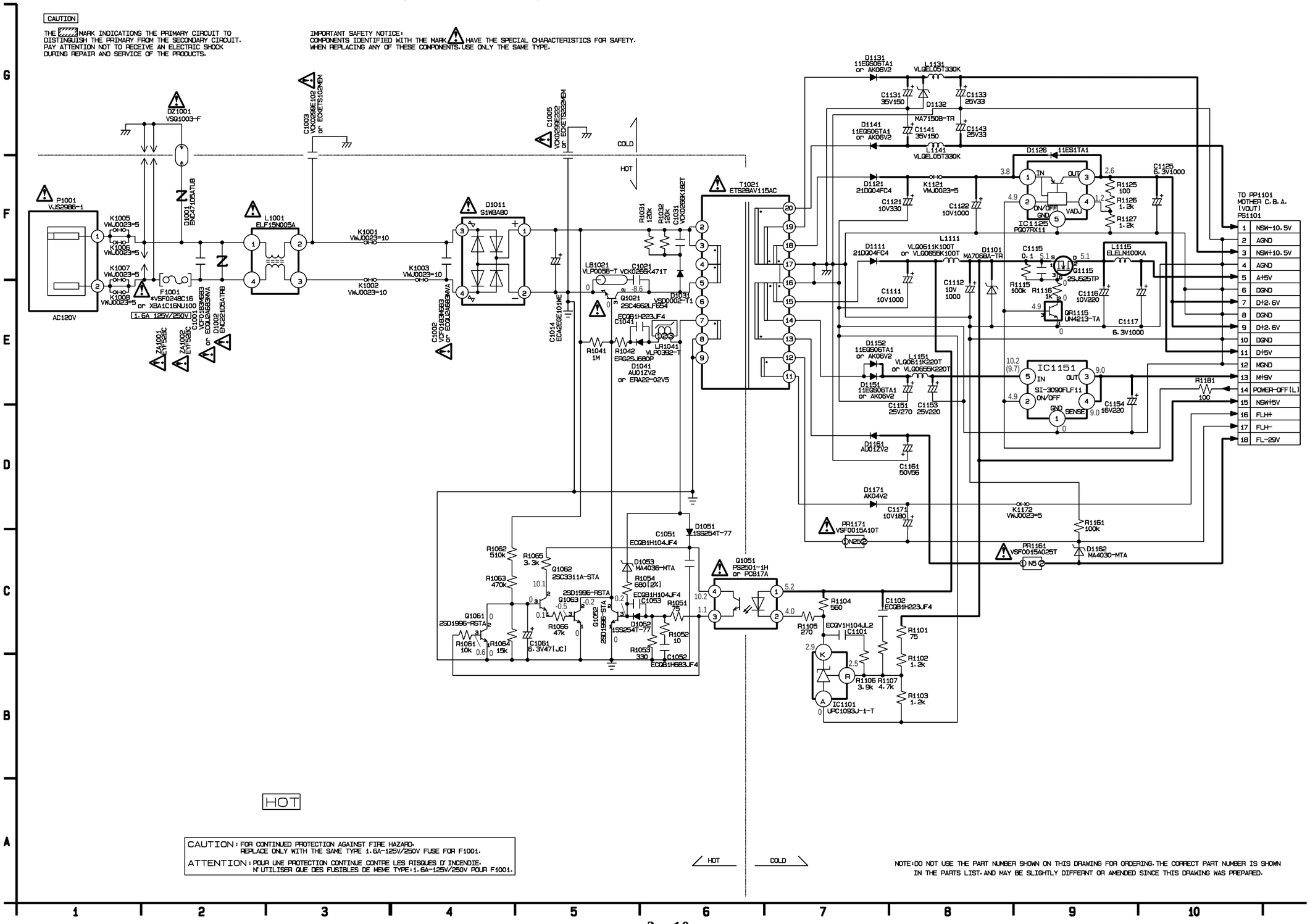

2. POWER SUPPLY SCHEMATIC DIAGRAM (FOR G, B, A MODELS)

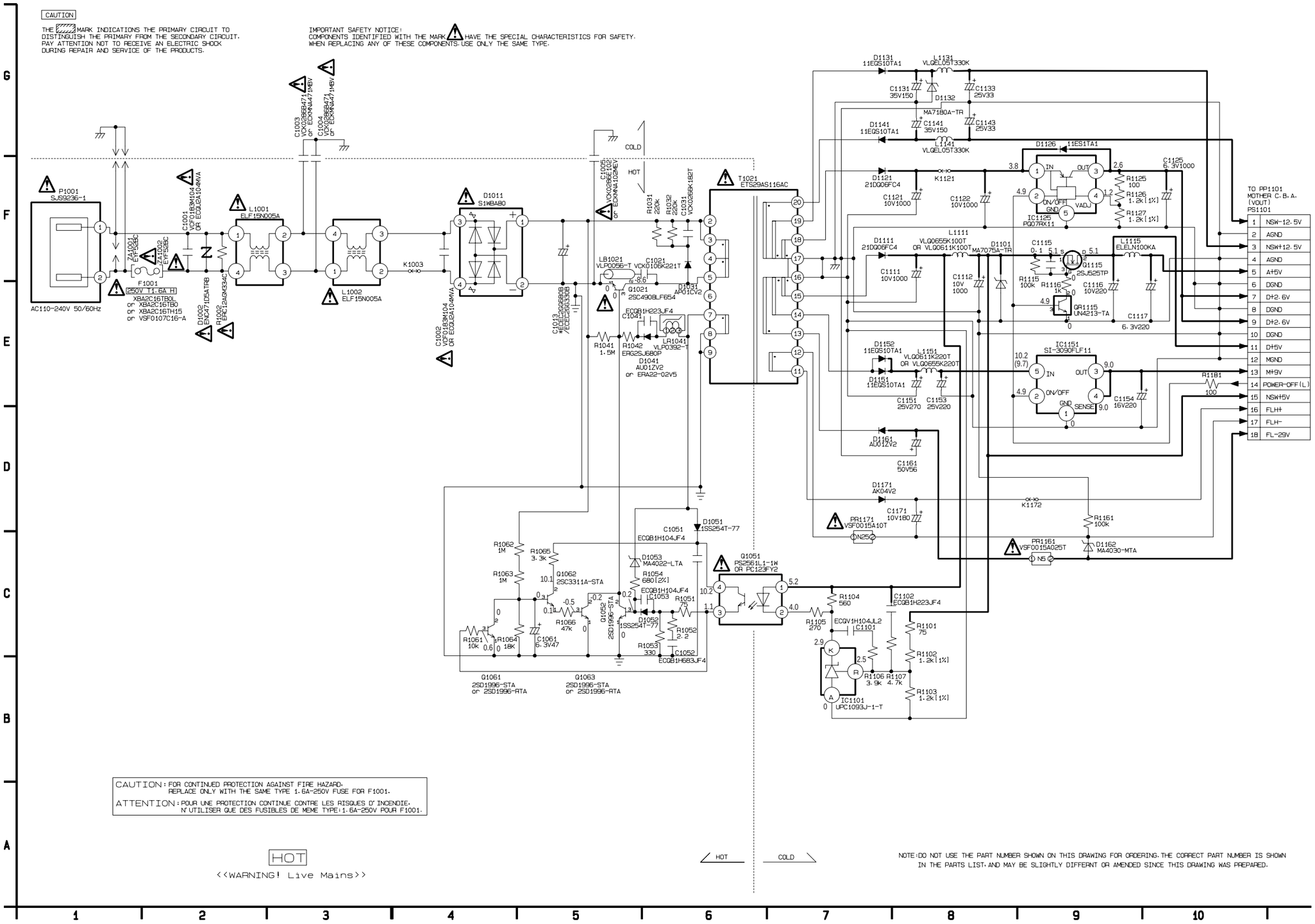

3. POWER SUPPLY SCHEMATIC DIAGRAM (FOR R MODEL)

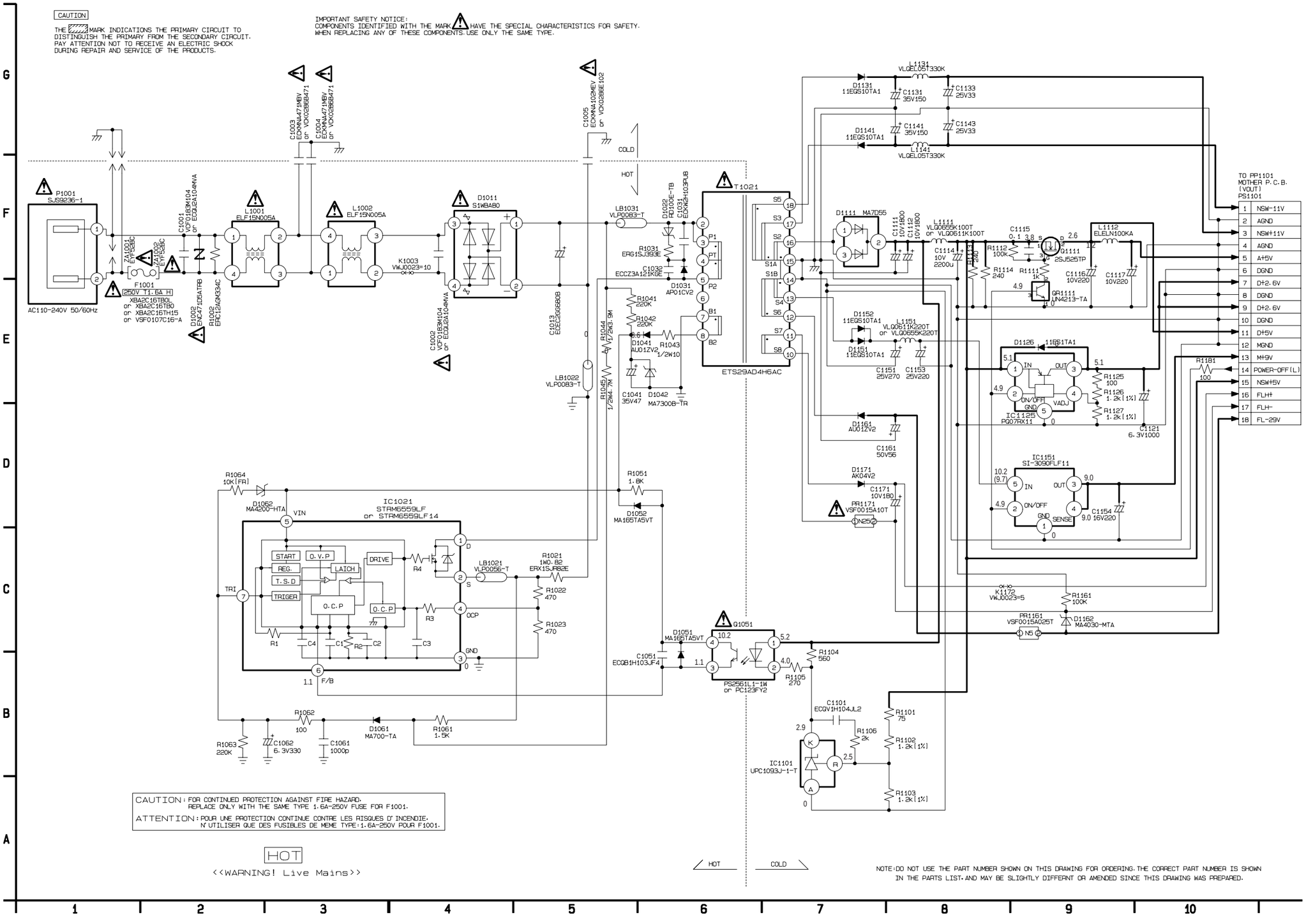

4. ADSC SECTION (MODULE C.B.A. (1/6)) SCHEMATIC DIAGRAM

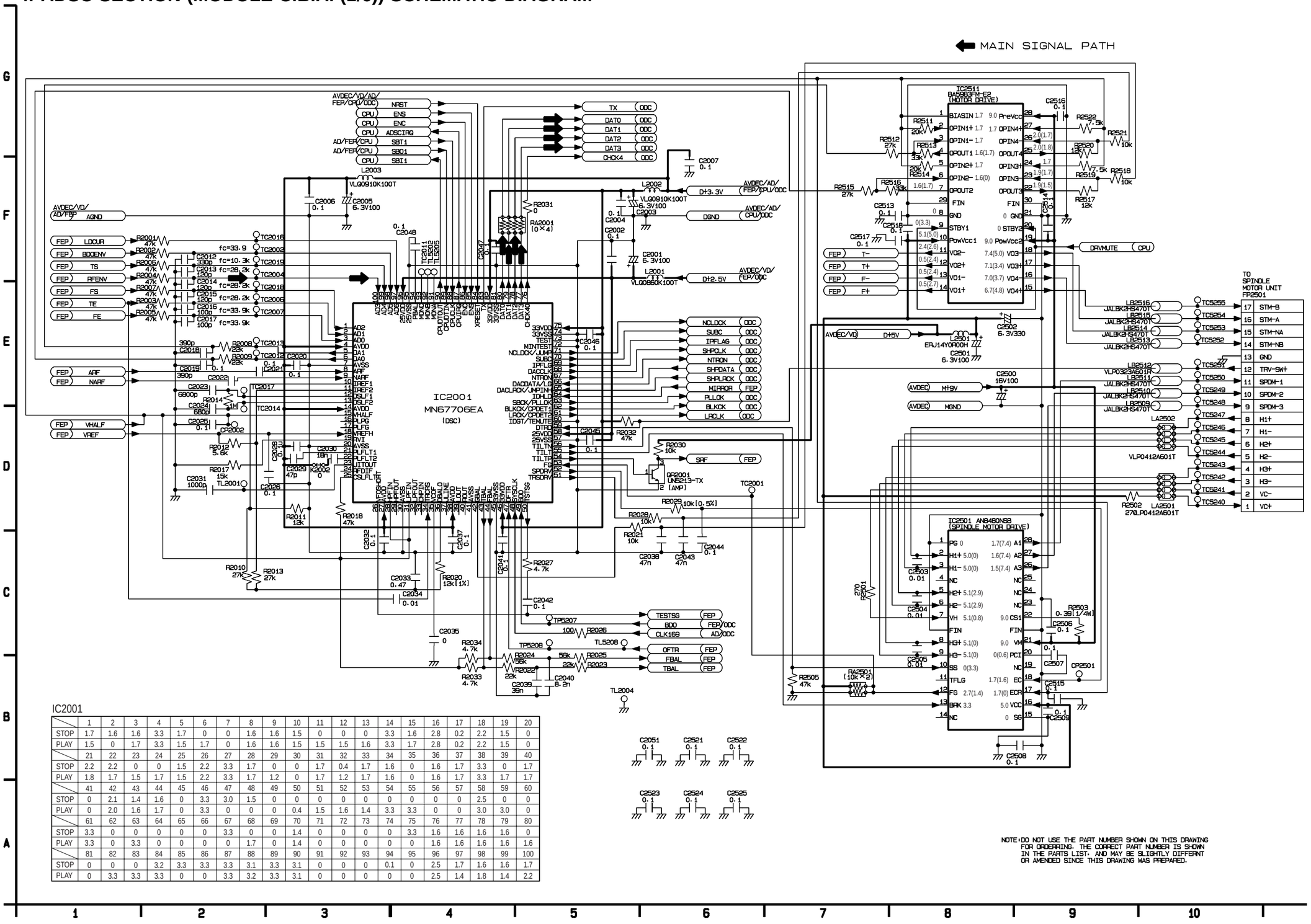

IC2001

	1	2	3	4	5	6	7	8	9	10	11	12	13	14	15	16	17	18	19	20
STOP	1.7	1.6	1.6	3.3	1.7	0	0	1.6	1.6	1.5	0	0	0	3.3	1.6	2.8	0.2	2.2	1.5	0
PLAY	1.5	0	1.7	3.3	1.5	1.7	0	1.6	1.6	1.5	1.5	1.5	1.6	3.3	1.7	2.8	0.2	2.2	1.5	0
	21	22	23	24	25	26	27	28	29	30	31	32	33	34	35	36	37	38	39	40
STOP	2.2	2.2	0	0	1.5	2.2	3.3	1.7	0	0	1.7	0.4	1.7	1.6	0	1.6	1.7	3.3	0	1.7
PLAY	1.8	1.7	1.5	1.7	1.5	2.2	3.3	1.7	1.2	0	1.7	1.2	1.7	1.6	0	1.6	1.7	3.3	1.7	1.7
	41	42	43	44	45	46	47	48	49	50	51	52	53	54	55	56	57	58	59	60
STOP	0	2.1	1.4	1.6	0	3.3	3.0	1.5	0	0	0	0	0	0	0	0	0	2.5	0	0
PLAY	0	2.0	1.6	1.7	0	3.3	0	0	0	0.4	1.5	1.6	1.4	3.3	3.3	0	0	3.0	3.0	0
	61	62	63	64	65	66	67	68	69	70	71	72	73	74	75	76	77	78	79	80
STOP	3.3	0	0	0	0	0	3.3	0	0	1.4	0	0	0	0	3.3	1.6	1.6	1.6	1.6	0
PLAY	3.3	0	3.3	0	0	0	0	1.7	0	1.4	0	0	0	0	0	1.6	1.6	1.6	1.6	1.6
	81	82	83	84	85	86	87	88	89	90	91	92	93	94	95	96	97	98	99	100
STOP	0	0	0	3.2	3.3	3.3	3.3	3.1	3.3	3.1	0	0	0	0.1	0	2.5	1.7	1.6	1.6	1.7
PLAY	0	3.3	3.3	3.3	0	0	3.3	3.2	3.3	3.1	0	0	0	0	0	2.5	1.4	1.8	1.4	2.2

5. AV DECORDER SECTION (MODULE C.B.A. (2/6)) SCHEMATIC DIAGRAM (FOR U MODEL)

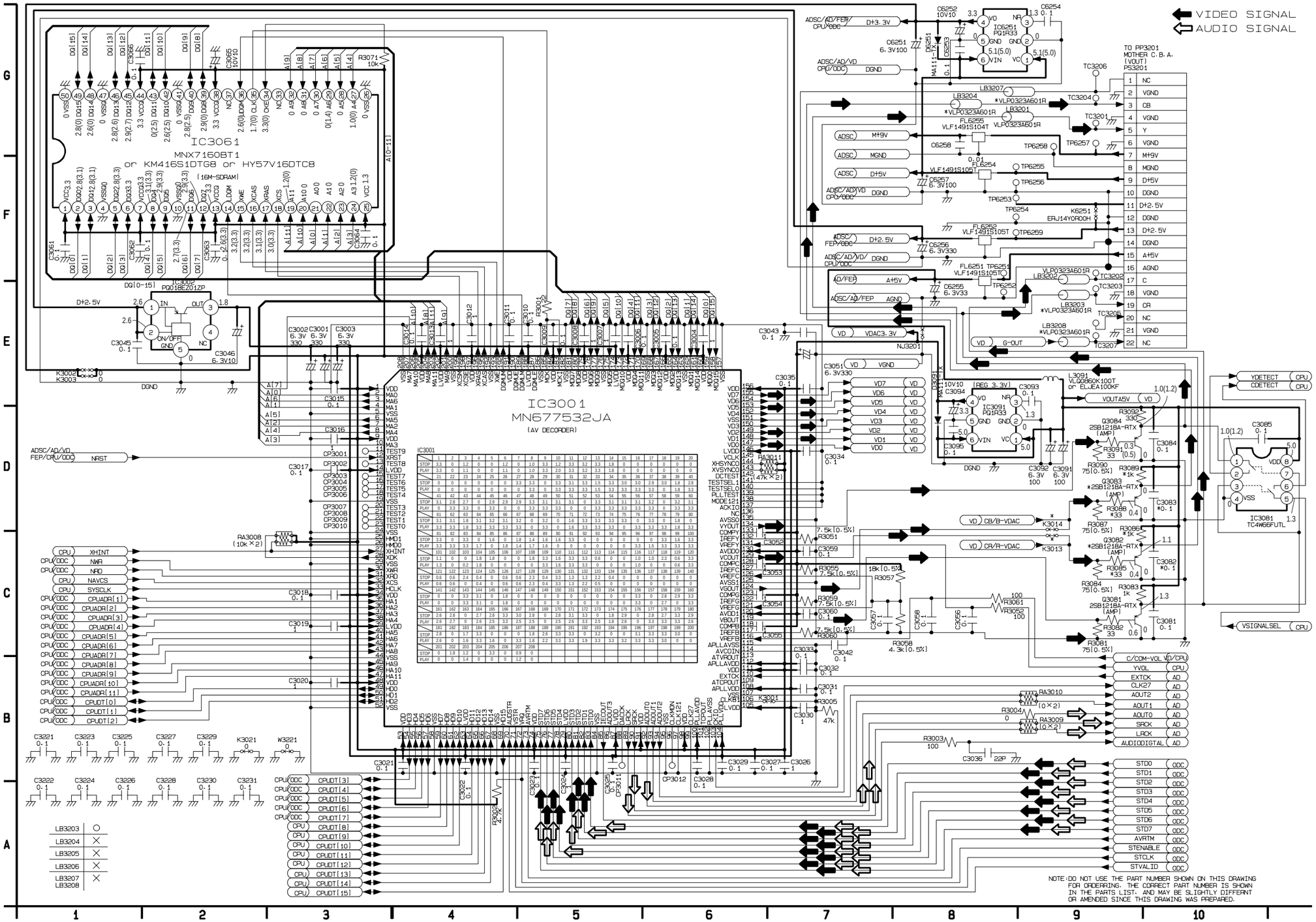

6. AV DECORDER SECTION (MODULE C.B.A. (2/6)) SCHEMATIC DIAGRAM (FOR G, B, A, R MODELS)

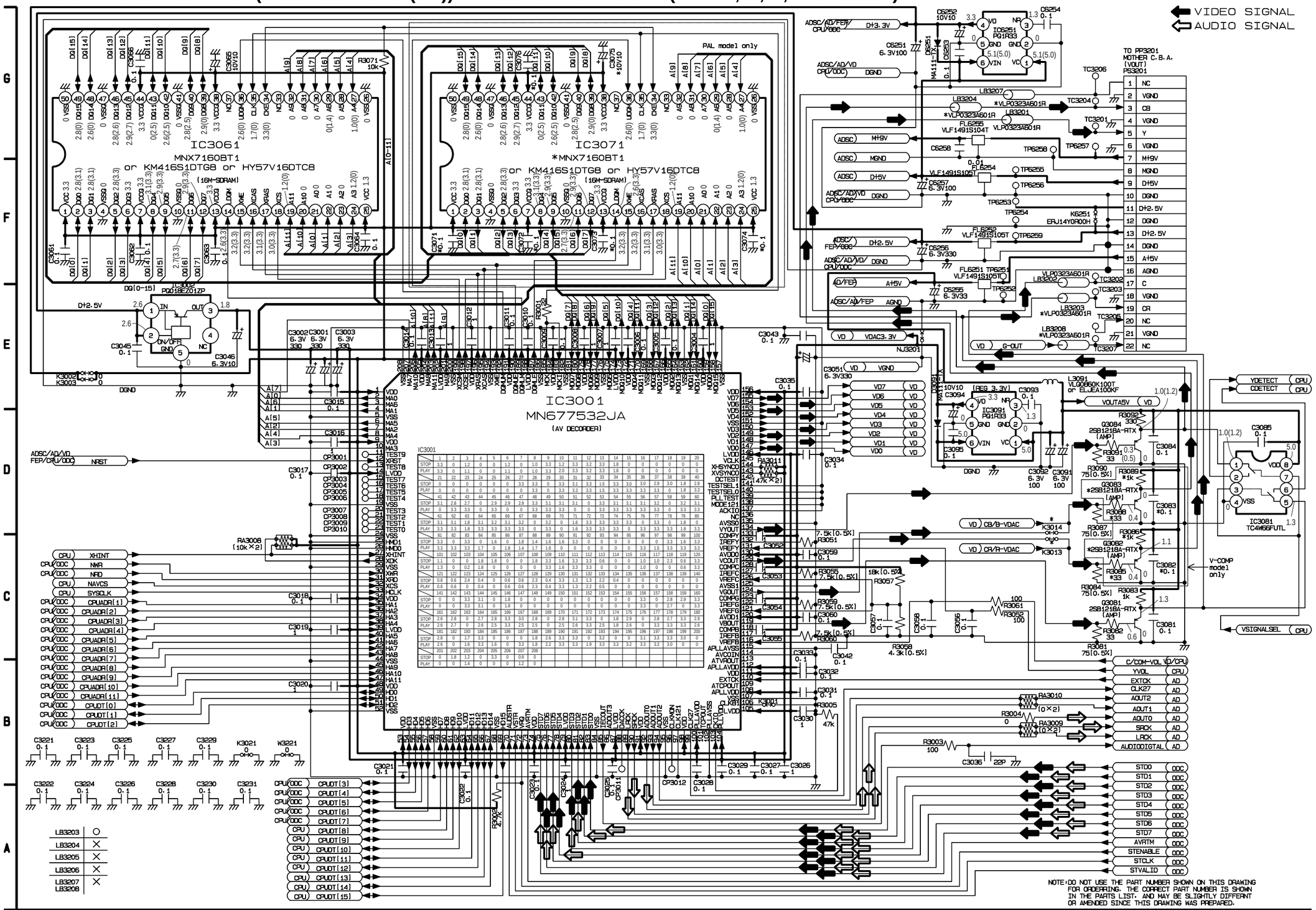

7. AUDIO SECTION (MODULE C.B.A. (3/6)) SCHEMATIC DIAGRAM

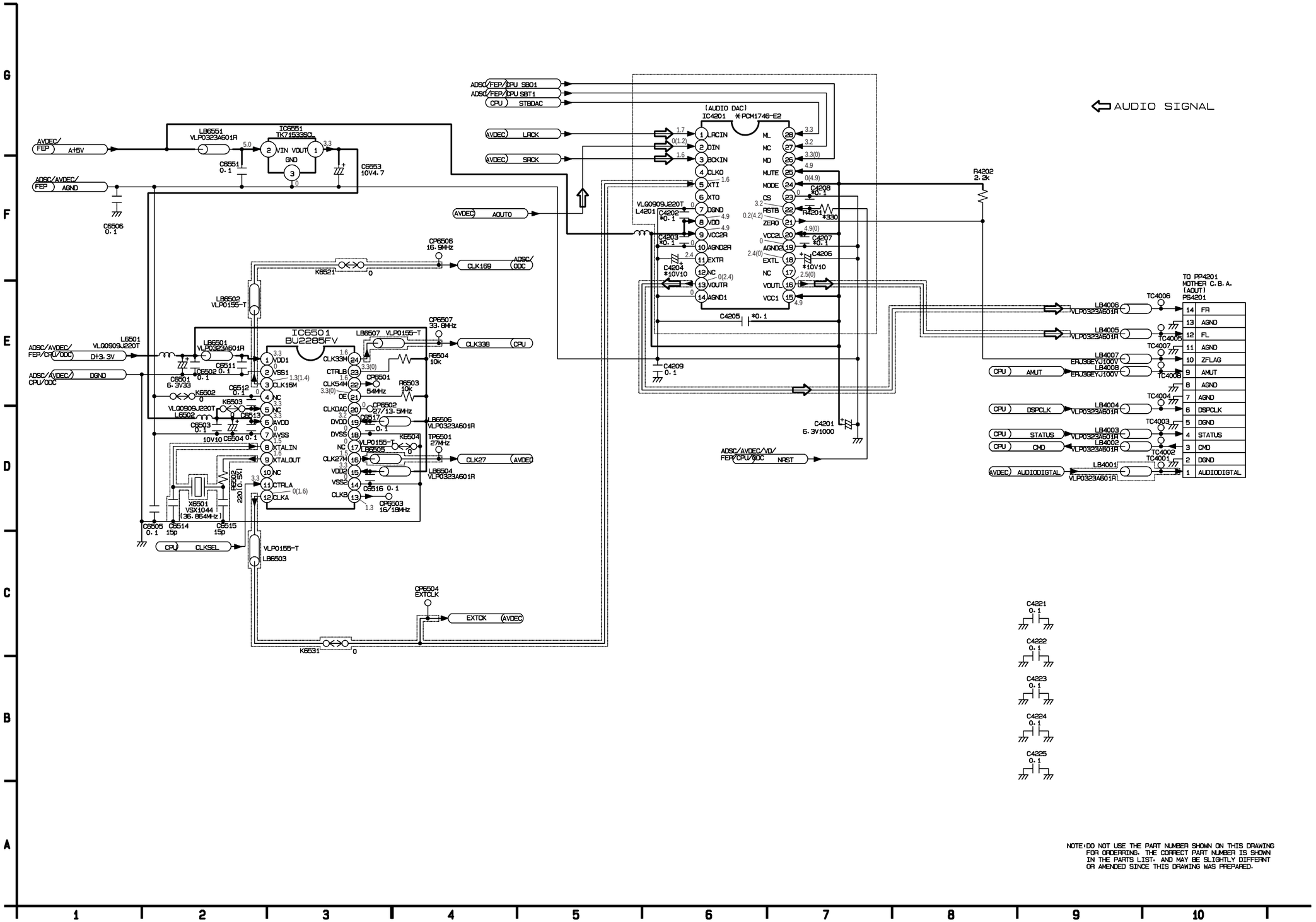

8. FEP SECTION (MODULE C.B.A. (4/6)) SCHEMATIC DIAGRAM

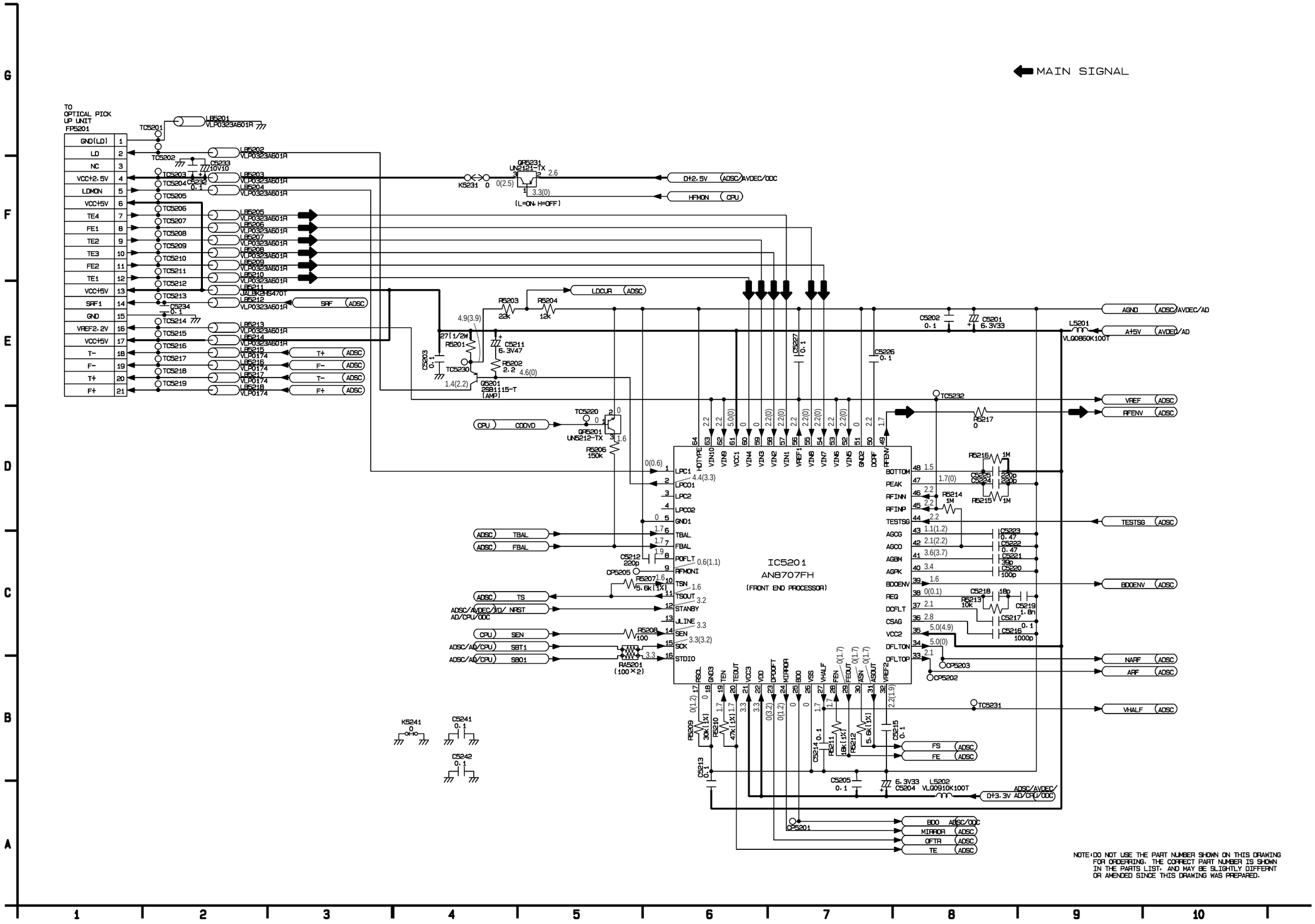

9. CPU SECTION (MODULE C.B.A. (5/6)) SCHEMATIC DIAGRAM

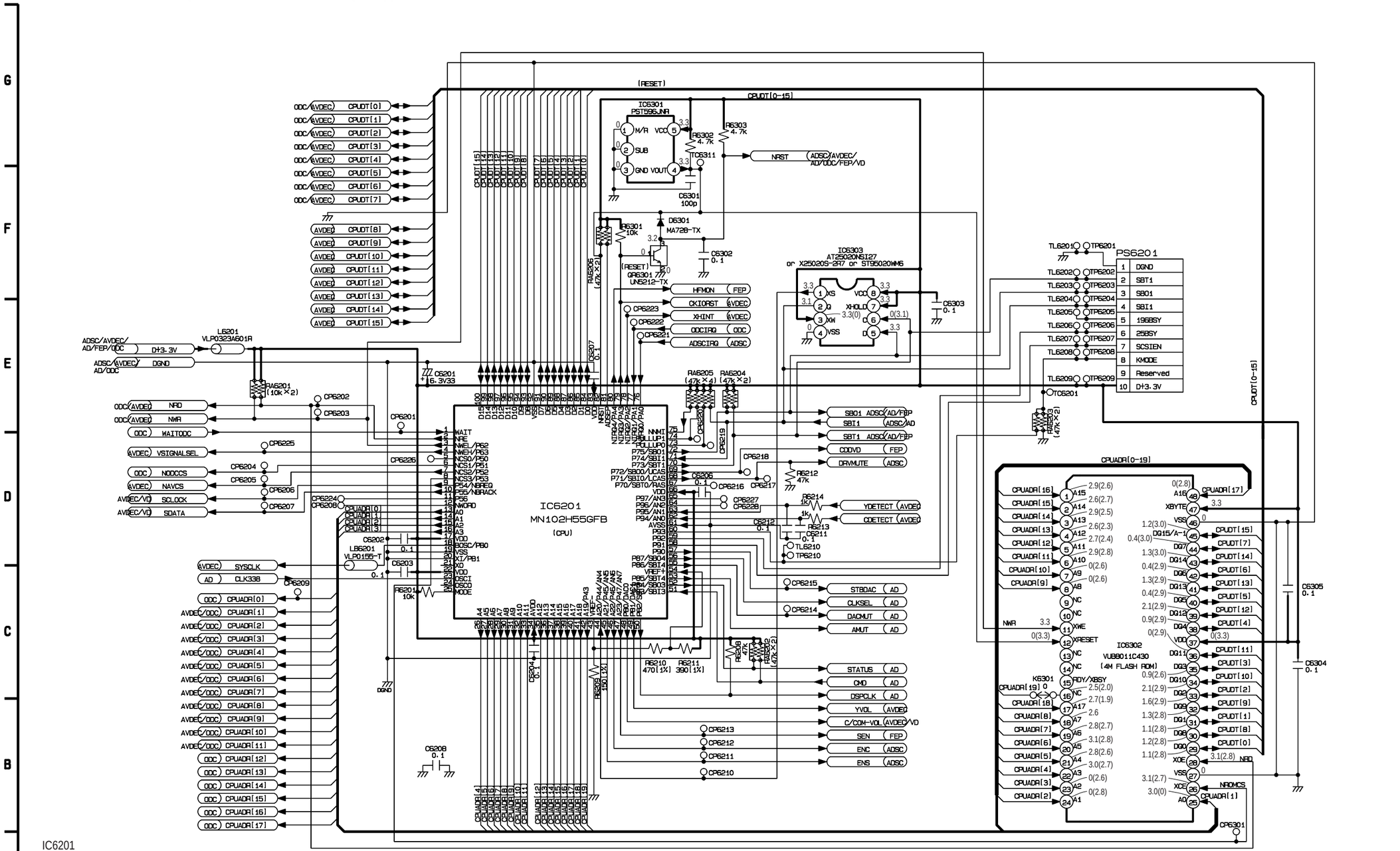

IC6201

	1	2	3	4	5	6	7	8	9	10	11	12	13	14	15	16	17	18	19	20	21	22	23	24	25	26	27	28	29	30	31	32	33	34	35	36	37	38	39	40
STOP	3.3	3.1	3.3	2.1	0	3.3	3.3	3.0	3.3	0	3.3	3.3	2.5	3.0	0	0	3.3	0	0	0	3.3	3.3	1.6	1.6	3.3	3.0	2.8	3.0	3.3	0.3	0	0.1	0.3	3.3	0	3.3	3.3	3.3	3.3	0.1
PLAY	3.3	0	3.3	2.3	0	0	3.3	2.7	0	0	0	0	0	2.7	0	0	0	0	0	0	3.3	3.3	1.6	1.6	3.3	2.7	2.6	2.7	2.7	2.6	2.6	2.6	2.7	3.3	2.4	2.3	2.5	2.7	2.5	2.8
	41	42	43	44	45	46	47	48	49	50	51	52	53	54	55	56	57	58	59	60	61	62	63	64	65	66	67	68	69	70	71	72	73	74	75	76	77	78	79	80
STOP	0.1	0.3	0	0.5	0.4	0.5	2.7	1.0	1.3	3.3	3.3	3.3	3.2	1.3	3.3	3.3	0.4	0.4	0.4	0	0	1.3	1.0	0.5	0.5	3.3	0	0	0	3.3	0	3.3	3.3	3.3	3.3	3.3	3.3	0	0	0
PLAY	1.9	2.0	0.8	3.3	3.3	3.3	3.3	1.0	1.2	2.8	1.5	2.5	0	1.3	3.3	3.3	3.3	0	0	0.1	0	1.3	1.2	3.3	0	3.3	3.3	3.3	0	3.3	2.8	3.3	3.2	0	3.2	3.3	0.1	0	0	0.1
	81	82	83	84	85	86	87	88	89	90	91	92	93	94	95	96	97	98	99	100																				
STOP	3.3	3.3	3.3	3.3	3.3	3.3	3.3	0	3.3	3.3	3.3	0	3.3	3.3	3.3	3.3	0	0	3.3	3.3																				
PLAY	3.2	3.3	3.3	0	2.6	0	0	0	3.3	3.3	2.4	0	0	0	2.5	0	0	3.3	3.3	3.3																				

NOTE:DO NOT USE THE PART NUMBER SHOWN ON THIS DRAWING FOR ORDERING. THE CORRECT PART NUMBER IS SHOWN IN THE PARTS LIST, AND MAY BE SLIGHTLY DIFFERNT OR AMENDED SINCE THIS DRAWING WAS PREPARED.

10. ODC SECTION (MODULE C.B.A. (6/6)) SCHEMATIC DIAGRAM

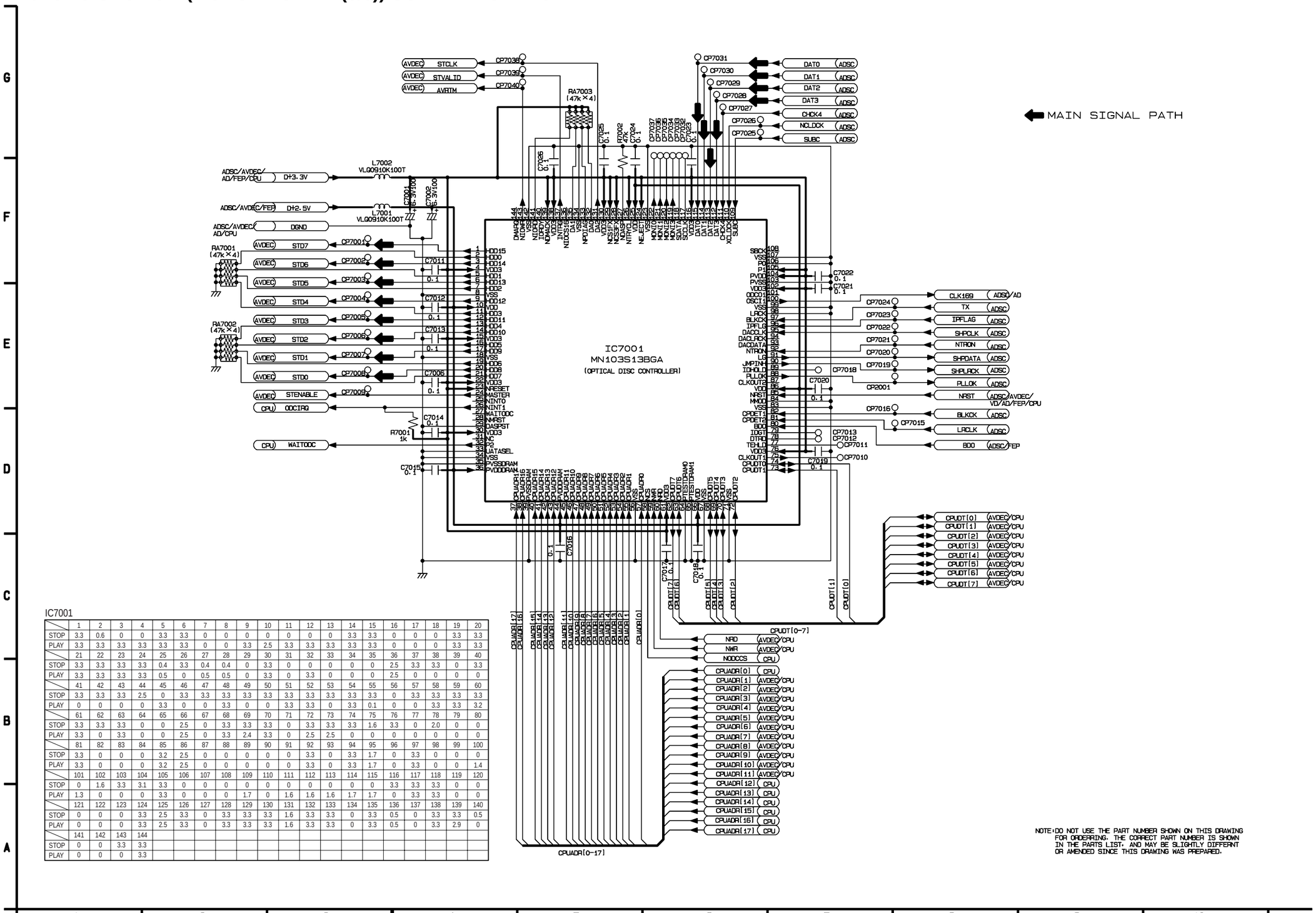

IC7001

	1	2	3	4	5	6	7	8	9	10	11	12	13	14	15	16	17	18	19	20
STOP	3.3	0.6	0	0	3.3	3.3	0	0	0	0	0	0	0	3.3	3.3	0	0	0	3.3	3.3
PLAY	3.3	3.3	3.3	3.3	3.3	3.3	0	0	3.3	2.5	3.3	3.3	3.3	3.3	3.3	0	0	0	3.3	3.3
	21	22	23	24	25	26	27	28	29	30	31	32	33	34	35	36	37	38	39	40
STOP	3.3	3.3	3.3	3.3	0.4	3.3	0.4	0.4	0	3.3	0	0	0	0	0	2.5	3.3	3.3	0	3.3
PLAY	3.3	3.3	3.3	3.3	0.5	0	0.5	0.5	0	3.3	0	3.3	0	0	0	2.5	0	0	0	0
	41	42	43	44	45	46	47	48	49	50	51	52	53	54	55	56	57	58	59	60
STOP	3.3	3.3	3.3	2.5	0	3.3	3.3	3.3	3.3	3.3	3.3	3.3	3.3	3.3	3.3	0	3.3	3.3	3.3	3.3
PLAY	0	0	0	0	3.3	0	0	3.3	0	0	3.3	3.3	0	3.3	0.1	0	0	3.3	3.3	3.2
	61	62	63	64	65	66	67	68	69	70	71	72	73	74	75	76	77	78	79	80
STOP	3.3	3.3	3.3	0	0	2.5	0	3.3	3.3	3.3	0	3.3	3.3	3.3	1.6	3.3	0	2.0	0	0
PLAY	3.3	0	3.3	0	0	2.5	0	3.3	2.4	3.3	0	2.5	2.5	0	0	0	0	0	0	0
	81	82	83	84	85	86	87	88	89	90	91	92	93	94	95	96	97	98	99	100
STOP	3.3	0	0	0	3.2	2.5	0	0	0	0	0	3.3	0	3.3	1.7	0	3.3	0	0	0
PLAY	3.3	0	0	0	3.2	2.5	0	0	0	0	0	3.3	0	3.3	1.7	0	3.3	0	0	1.4
	101	102	103	104	105	106	107	108	109	110	111	112	113	114	115	116	117	118	119	120
STOP	0	1.6	3.3	3.1	3.3	0	0	0	0	0	0	0	0	0	0	3.3	3.3	3.3	0	0
PLAY	1.3	0	0	0	3.3	0	0	0	1.7	0	1.6	1.6	1.6	1.7	1.7	0	3.3	3.3	0	0
	121	122	123	124	125	126	127	128	129	130	131	132	133	134	135	136	137	138	139	140
STOP	0	0	0	3.3	2.5	3.3	0	3.3	3.3	3.3	1.6	3.3	3.3	0	3.3	0.5	0	3.3	3.3	0.5
PLAY	0	0	0	3.3	2.5	3.3	0	3.3	3.3	3.3	1.6	3.3	3.3	0	3.3	0.5	0	3.3	2.9	0
	141	142	143	144																
STOP	0	0	3.3	3.3																
PLAY	0	0	0	3.3																

11.VIDEO OUT SECTION (MOTHER C.B.A. (1/4)) SCHEMATIC DIAGRAM (FOR U, A, R MODELS)

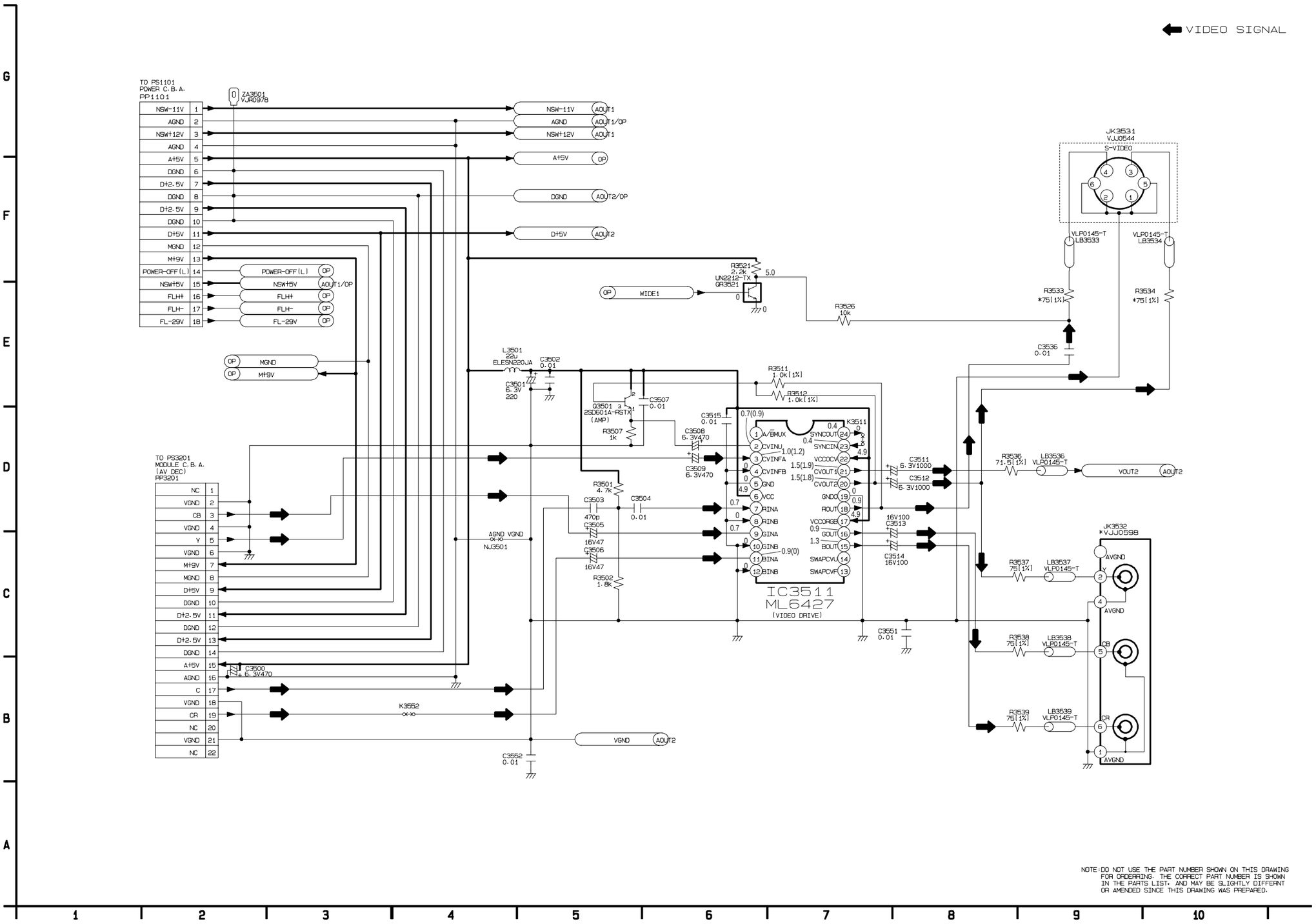

12.VIDEO OUT SECTION (MOTHER C.B.A. (1/4)) SCHEMATIC DIAGRAM (FOR G, B MODELS)

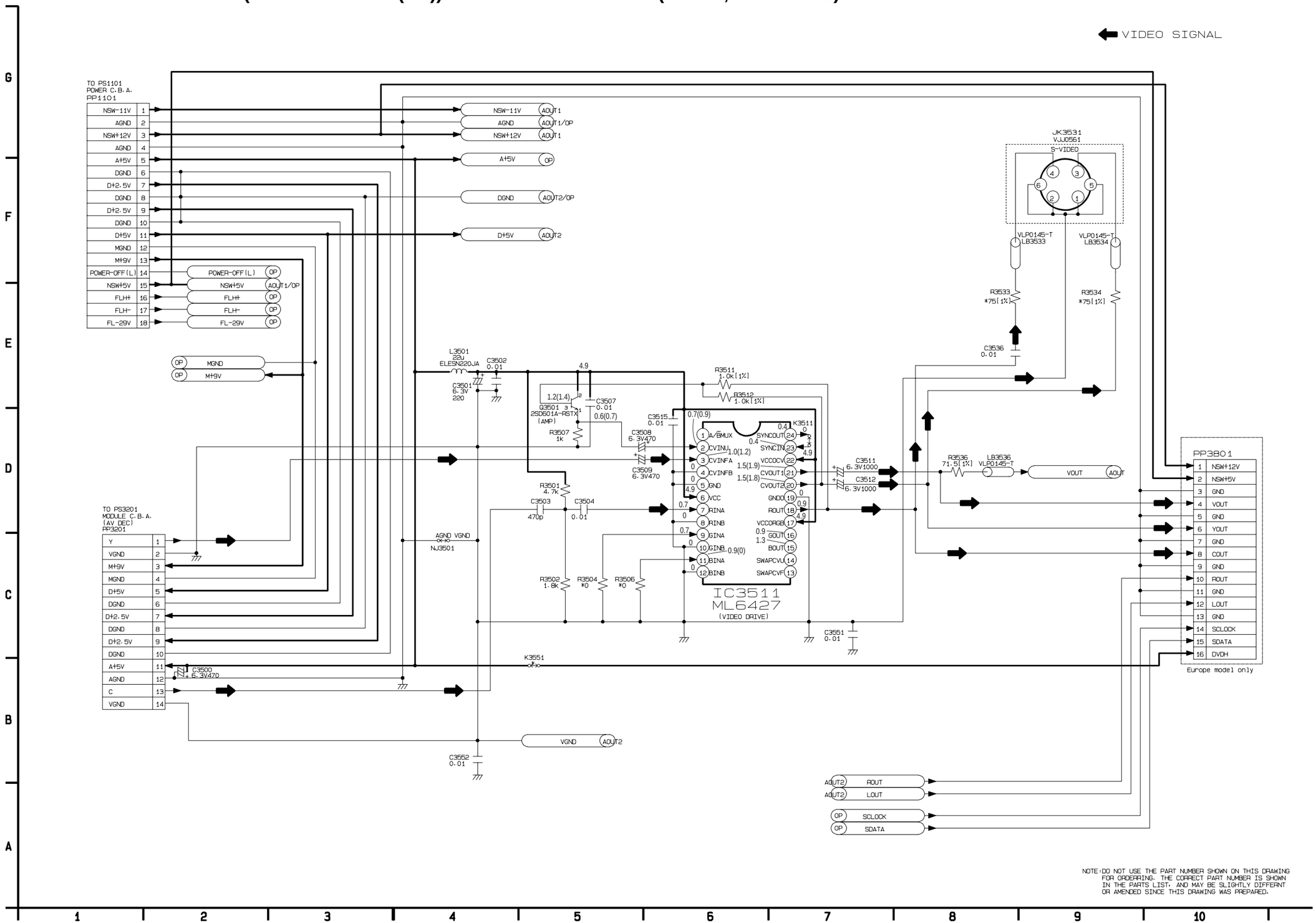

NOTE:DO NOT USE THE PART NUMBER SHOWN ON THIS DRAWING FOR ORDERRING. THE CORRECT PART NUMBER IS SHOWN IN THE PARTS LIST, AND MAY BE SLIGHTLY DIFFERNT OR AMENDED SINCE THIS DRAWING WAS PREPARED.

13. AUDIO OUT1 SECTION (MOTHER C.B.A. (2/4)) SCHEMATIC DIAGRAM

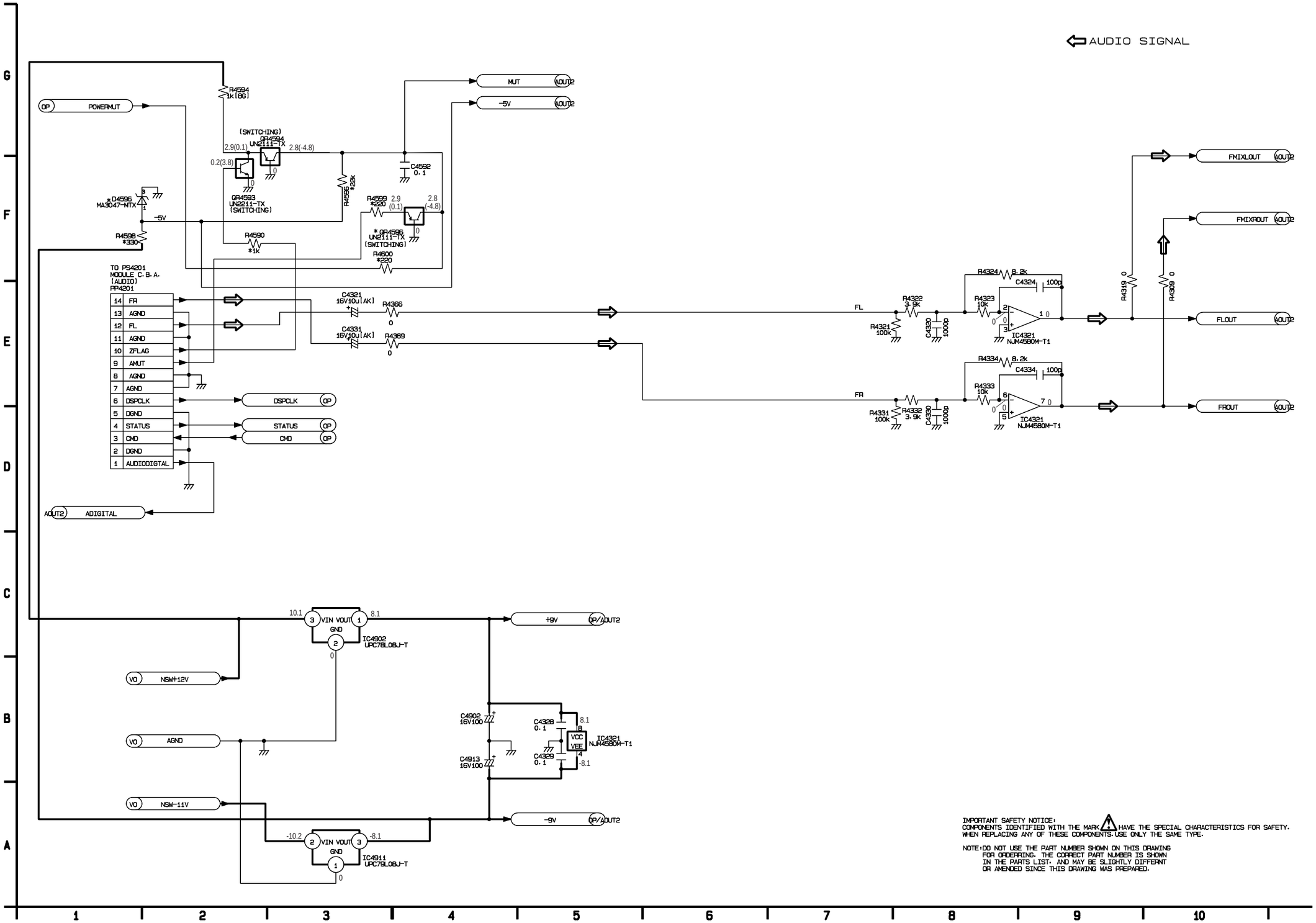

IMPORTANT SAFETY NOTICE:
COMPONENTS IDENTIFIED WITH THE MARK ⚠ HAVE THE SPECIAL CHARACTERISTICS FOR SAFETY.
WHEN REPLACING ANY OF THESE COMPONENTS, USE ONLY THE SAME TYPE.

NOTE: DO NOT USE THE PART NUMBER SHOWN ON THIS DRAWING FOR ORDERRING. THE CORRECT PART NUMBER IS SHOWN IN THE PARTS LIST. AND MAY BE SLIGHTLY DIFFERNT OR AMENDED SINCE THIS DRAWING WAS PREPARED.

14. AUDIO OUT2 SECTION (MOTHER C.B.A. (3/4)) SCHEMATIC DIAGRAM

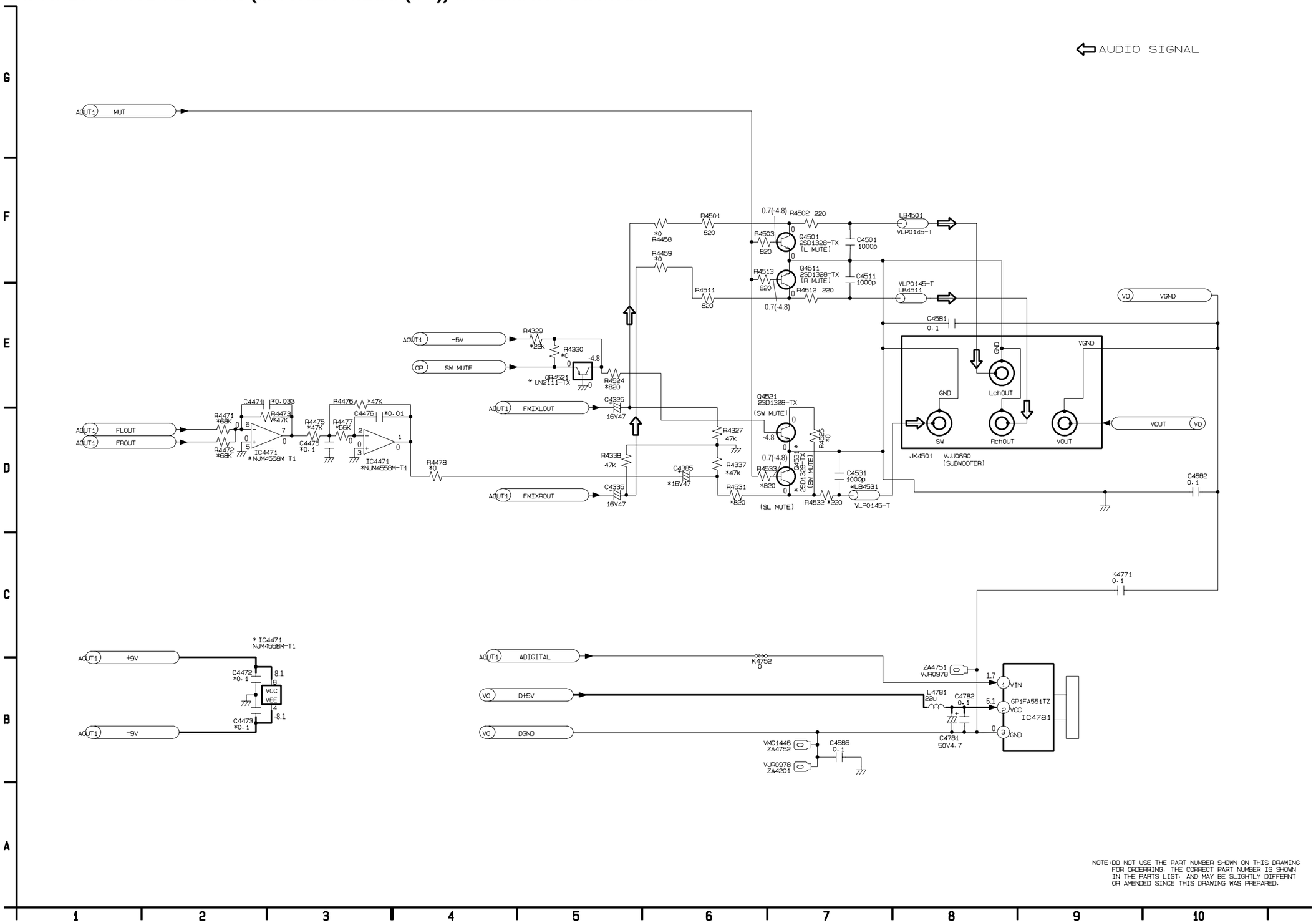

NOTE:DO NOT USE THE PART NUMBER SHOWN ON THIS DRAWING FOR ORDERRING. THE CORRECT PART NUMBER IS SHOWN IN THE PARTS LIST. AND MAY BE SLIGHTLY DIFFERNT OR AMENDED SINCE THIS DRAWING WAS PREPARED.

15. OPERATION SECTION (MOTHER C.B.A. (4/4)) SCHEMATIC DIAGRAM

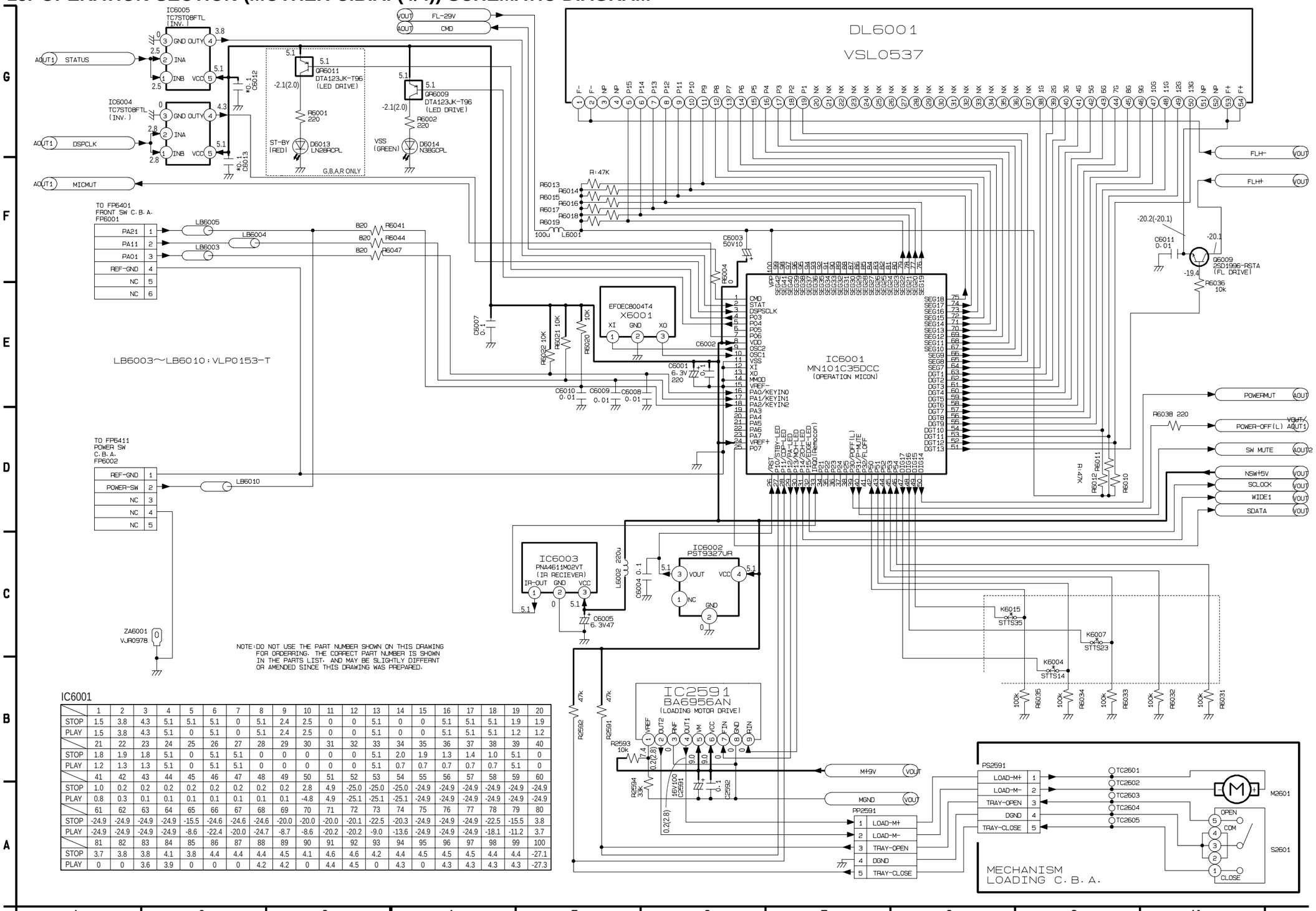

IC6001

	1	2	3	4	5	6	7	8	9	10	11	12	13	14	15	16	17	18	19	20
STOP	1.5	3.8	4.3	5.1	5.1	5.1	0	5.1	2.4	2.5	0	0	5.1	0	0	5.1	5.1	5.1	1.9	1.9
PLAY	1.5	3.8	4.3	5.1	0	5.1	0	5.1	2.4	2.5	0	0	5.1	0	0	5.1	5.1	5.1	1.2	1.2
	21	22	23	24	25	26	27	28	29	30	31	32	33	34	35	36	37	38	39	40
STOP	1.8	1.9	1.8	5.1	0	5.1	5.1	0	0	0	0	0	5.1	2.0	1.9	1.3	1.4	1.0	5.1	0
PLAY	1.2	1.3	1.3	5.1	0	5.1	5.1	0	0	0	0	0	5.1	0.7	0.7	0.7	0.7	0.7	5.1	0
	41	42	43	44	45	46	47	48	49	50	51	52	53	54	55	56	57	58	59	60
STOP	1.0	0.2	0.2	0.2	0.2	0.2	0.2	0.2	0.2	2.8	4.9	-25.0	-25.0	-25.0	-24.9	-24.9	-24.9	-24.9	-24.9	-24.9
PLAY	0.8	0.3	0.1	0.1	0.1	0.1	0.1	0.1	0.1	-4.8	4.9	-25.1	-25.1	-25.1	-24.9	-24.9	-24.9	-24.9	-24.9	-24.9
	61	62	63	64	65	66	67	68	69	70	71	72	73	74	75	76	77	78	79	80
STOP	-24.9	-24.9	-24.9	-24.9	-15.5	-24.6	-24.6	-24.6	-20.0	-20.0	-20.0	-20.1	-22.5	-20.3	-24.9	-24.9	-24.9	-22.5	-15.5	3.8
PLAY	-24.9	-24.9	-24.9	-24.9	-8.6	-22.4	-20.0	-24.7	-8.7	-8.6	-20.2	-20.2	-9.0	-13.6	-24.9	-24.9	-24.9	-18.1	-11.2	3.7
	81	82	83	84	85	86	87	88	89	90	91	92	93	94	95	96	97	98	99	100
STOP	3.7	3.8	3.8	4.1	3.8	4.4	4.4	4.4	4.5	4.1	4.6	4.6	4.2	4.4	4.5	4.5	4.5	4.4	4.4	-27.1
PLAY	0	0	3.6	3.9	0	0	0	4.2	4.2	0	4.4	4.5	0	4.3	0	4.3	4.3	4.3	4.3	-27.3

16. FRONT SWITCH AND POWER SWITCH SCHEMATIC DIAGRAM

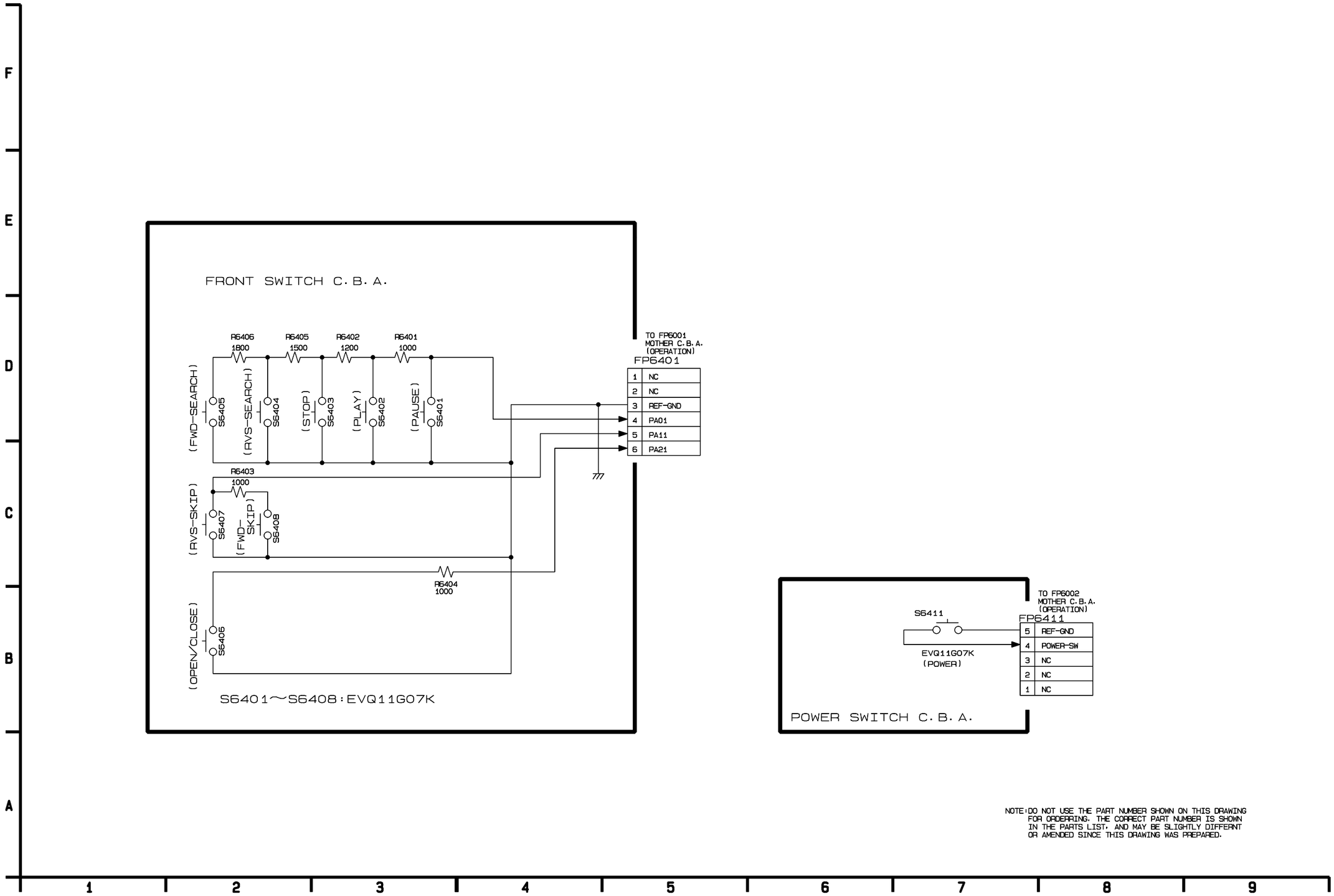

17. SCART SCHEMATIC DIAGRAM (FOR G, B MODELS)

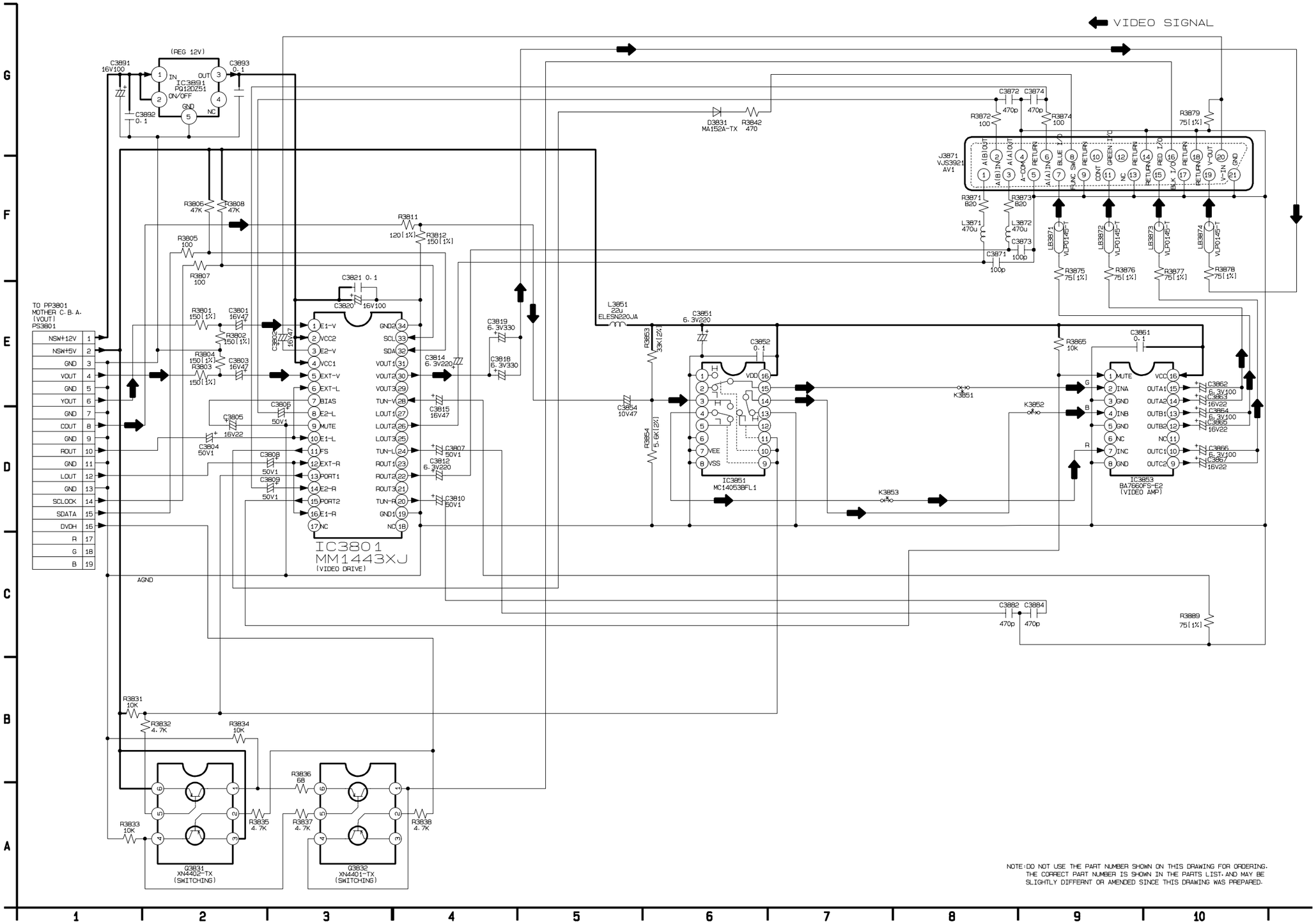

CIRCUIT BOARD DIAGRAM

1. POWER SUPPLY C.B.A. (FOR U MODEL)

CAUTION THE STRIPED FRAME INDICATES THE PRIMARY CIRCUIT TO DISTINGUISH THE PRIMARY FROM THE SECONDARY CIRCUIT.
PAY ATTENTION NOT TO RECEIVE AN ELECTRIC SHOCK DURING REPAIR AND SERVICE OF THE PRODUCTS.

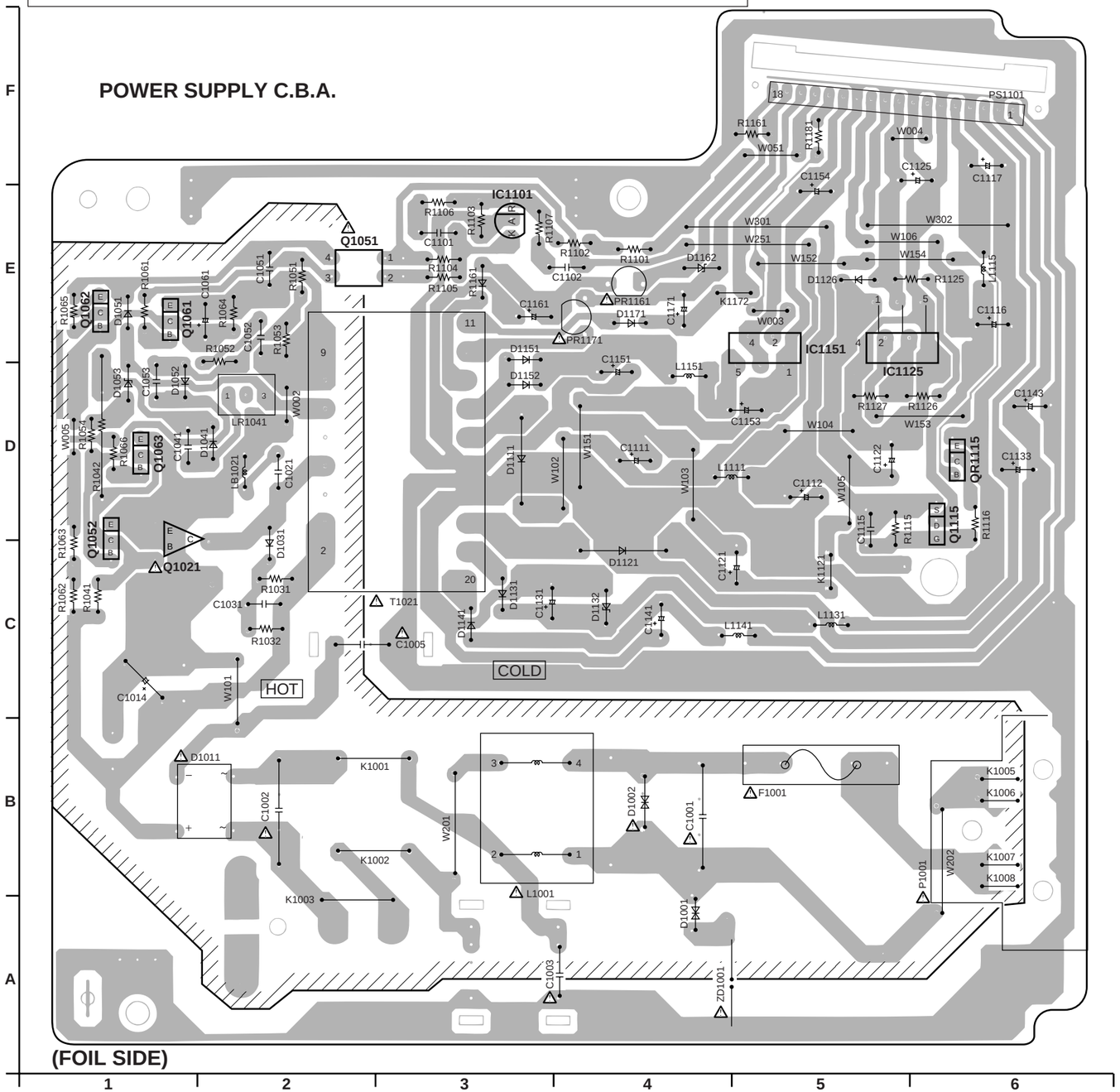

POWER SUPPLY C.B.A.			
Transistors		**Integrated Circuits**	
Q1021	C-1	IC1101	E-3
Q1051	E-2	IC1125	E-5
Q1052	D-1	IC1151	E-5
Q1061	E-1	**Connectors**	
Q1062	E-1	P1001	B-6
Q1063	D-1	PS1101	F-6
Q1115	D-6		
Transistor-resistors			
QR1115	D-6		

ADDRESS INFORMATION

2. POWER SUPPLY C.B.A. (FOR G, B, A MODELS)

CAUTION THE STRIPED FRAME INDICATES THE PRIMARY CIRCUIT TO DISTINGUISH THE PRIMARY FROM THE SECONDARY CIRCUIT.
PAY ATTENTION NOT TO RECEIVE AN ELECTRIC SHOCK DURING REPAIR AND SERVICE OF THE PRODUCTS.

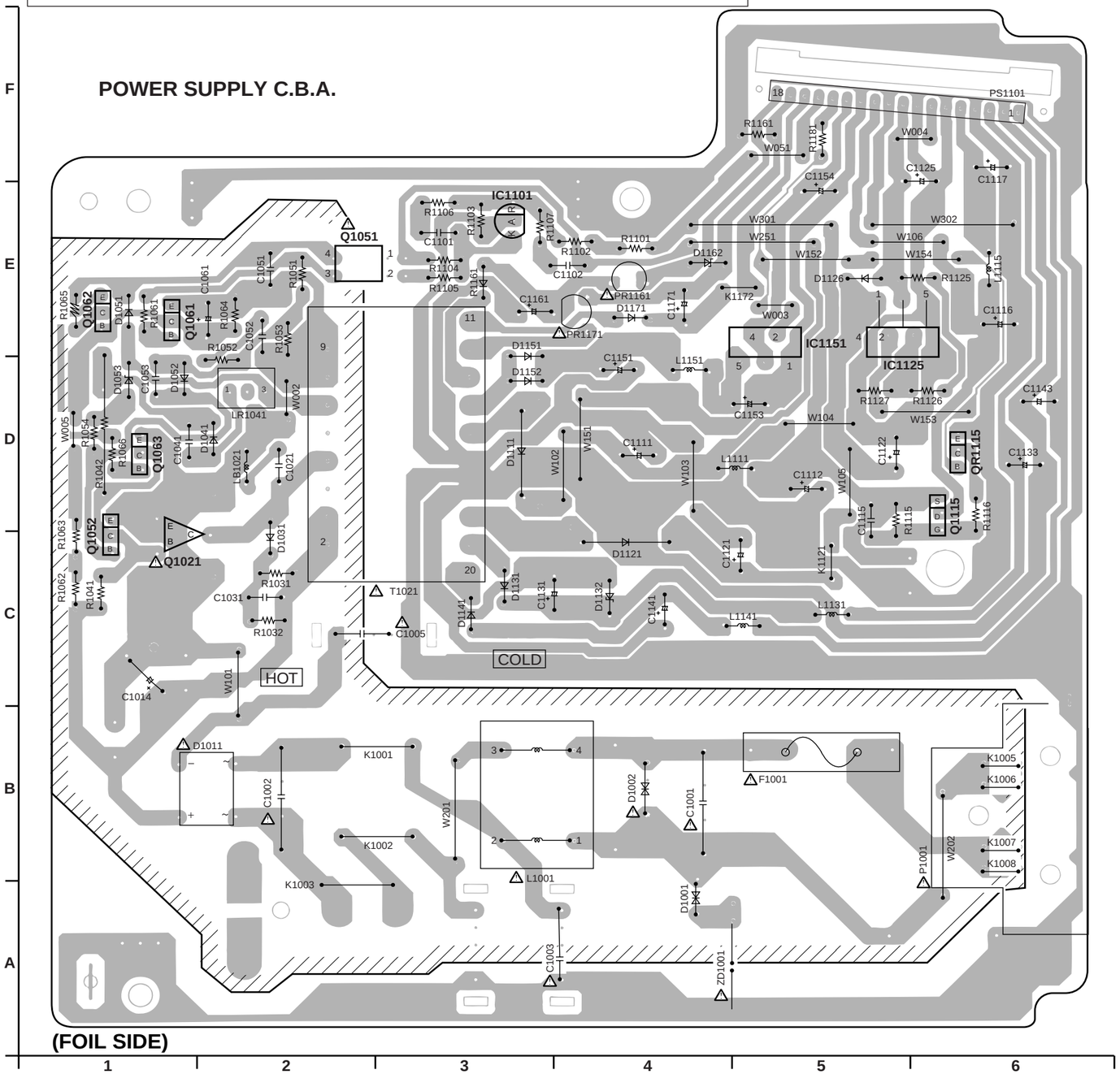

POWER SUPPLY C.B.A.			
Transistors		**Integrated Circuits**	
Q1021	C-1	IC1101	E-3
Q1051	E-2	IC1125	E-5
Q1052	D-1	IC1151	E-5
Q1061	E-1	**Connectors**	
Q1062	E-1	P1001	B-6
Q1063	D-1	PS1101	F-6
Q1115	D-6		
Transistor-resistors			
QR1115	D-6		

ADDRESS INFORMATION

3. POWER SUPPLY C.B.A. (FOR R MODEL)

CAUTION THE STRIPED FRAME INDICATES THE PRIMARY CIRCUIT TO DISTINGUISH THE PRIMARY FROM THE SECONDARY CIRCUIT.
PAY ATTENTION NOT TO RECEIVE AN ELECTRIC SHOCK DURING REPAIR AND SERVICE OF THE PRODUCTS.

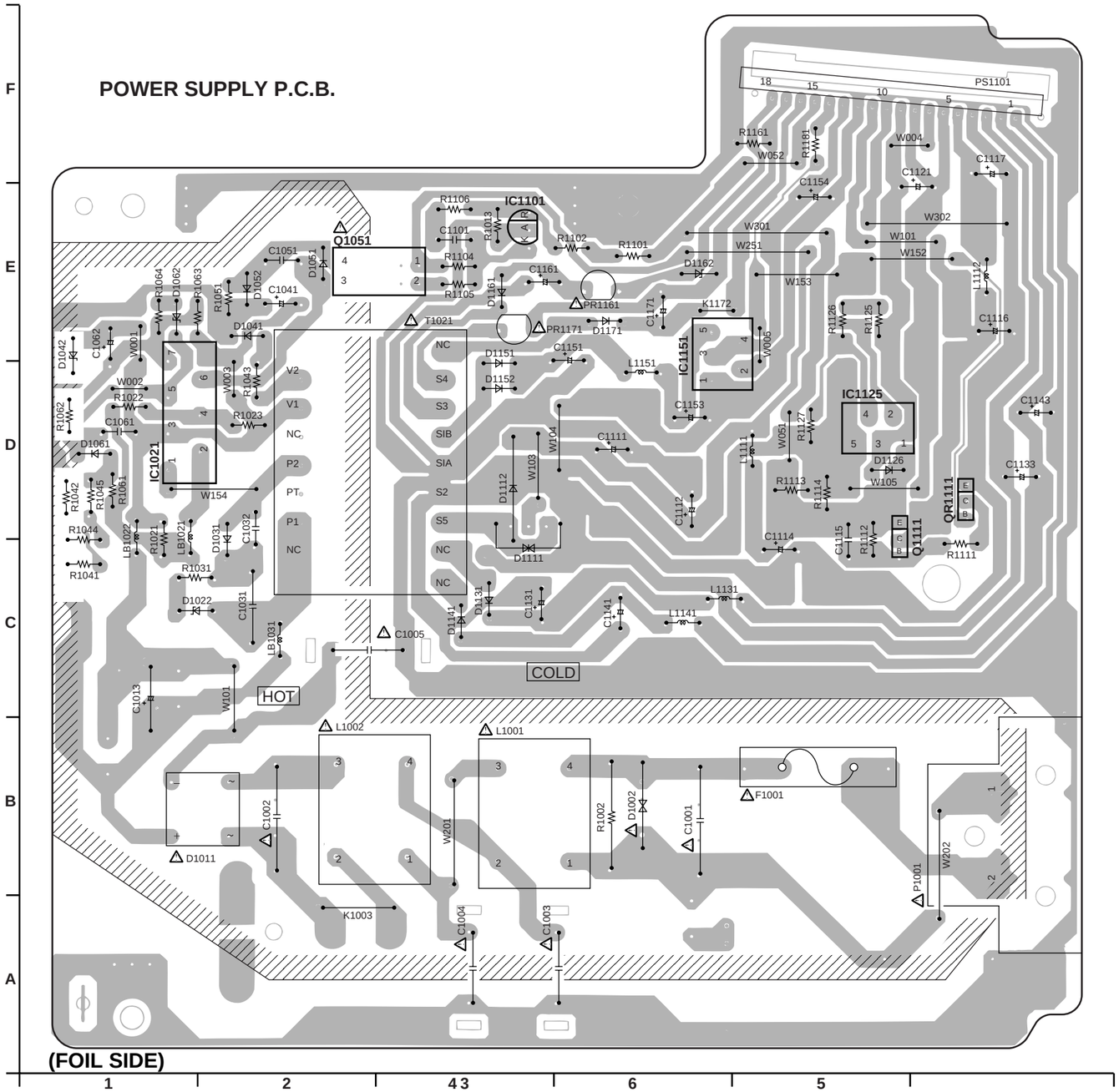

POWER SUPPLY P.C.B.			
Transistors		**Integrated Circuits**	
Q1051	E-2	IC1021	D-1
Q1111	D-6	IC1101	E-3
Transistor-resistors		IC1125	D-5
		IC1151	E-4
QR1111	D-7	**Connectors**	
		P1001	B-6
		PS1101	F-6

ADDRESS INFORMATION

4. MODULE C.B.A.

MODULE C.B.A. (1/2)

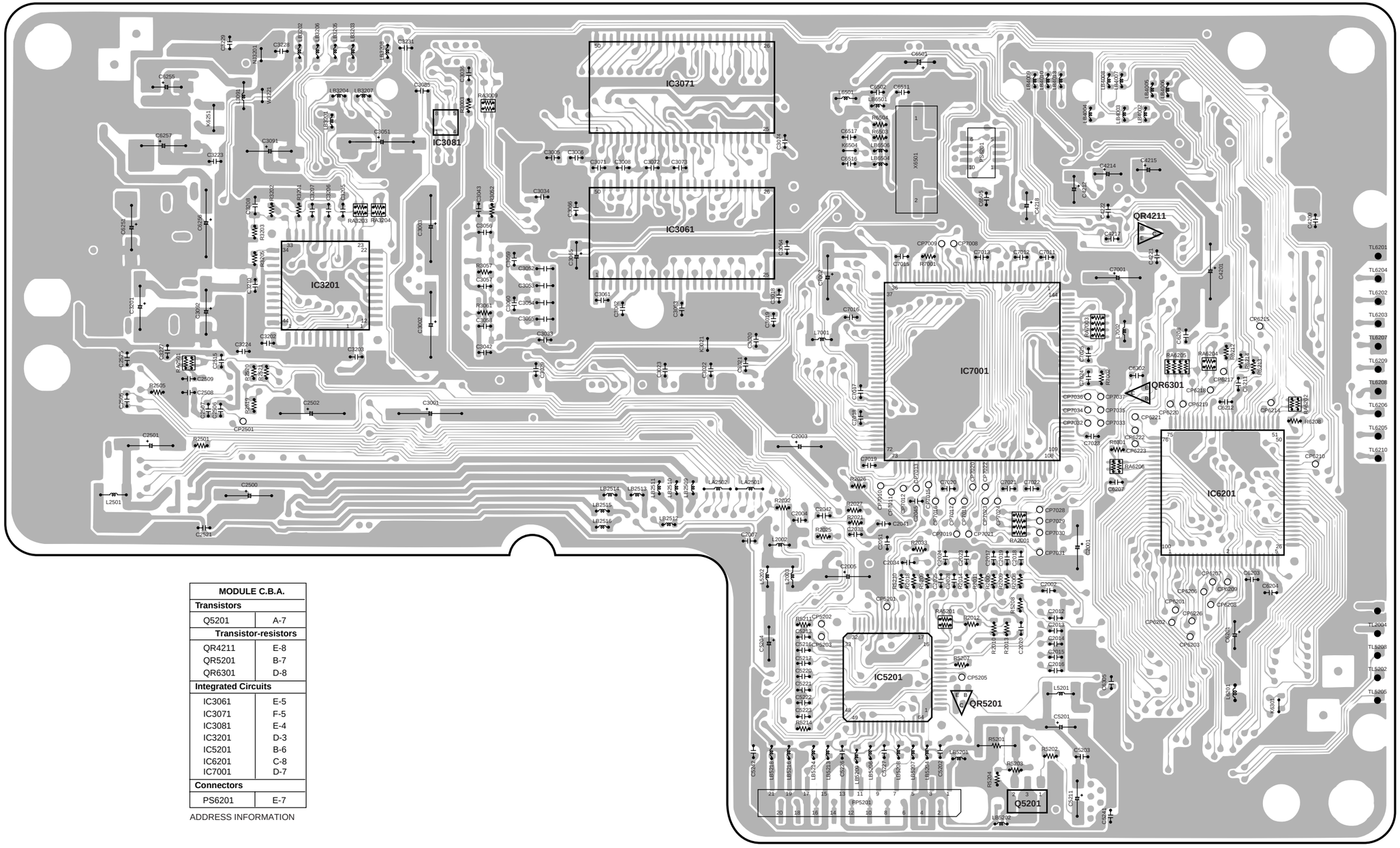

MODULE C.B.A.	
Transistors	
Q5201	A-7
Transistor-resistors	
QR4211	E-8
QR5201	B-7
QR6301	D-8
Integrated Circuits	
IC3061	E-5
IC3071	F-5
IC3081	E-4
IC3201	D-3
IC5201	B-6
IC6201	C-8
IC7001	D-7
Connectors	
PS6201	E-7

ADDRESS INFORMATION

(COMPONENT SIDE)

MODULE C.B.A.(2/2)

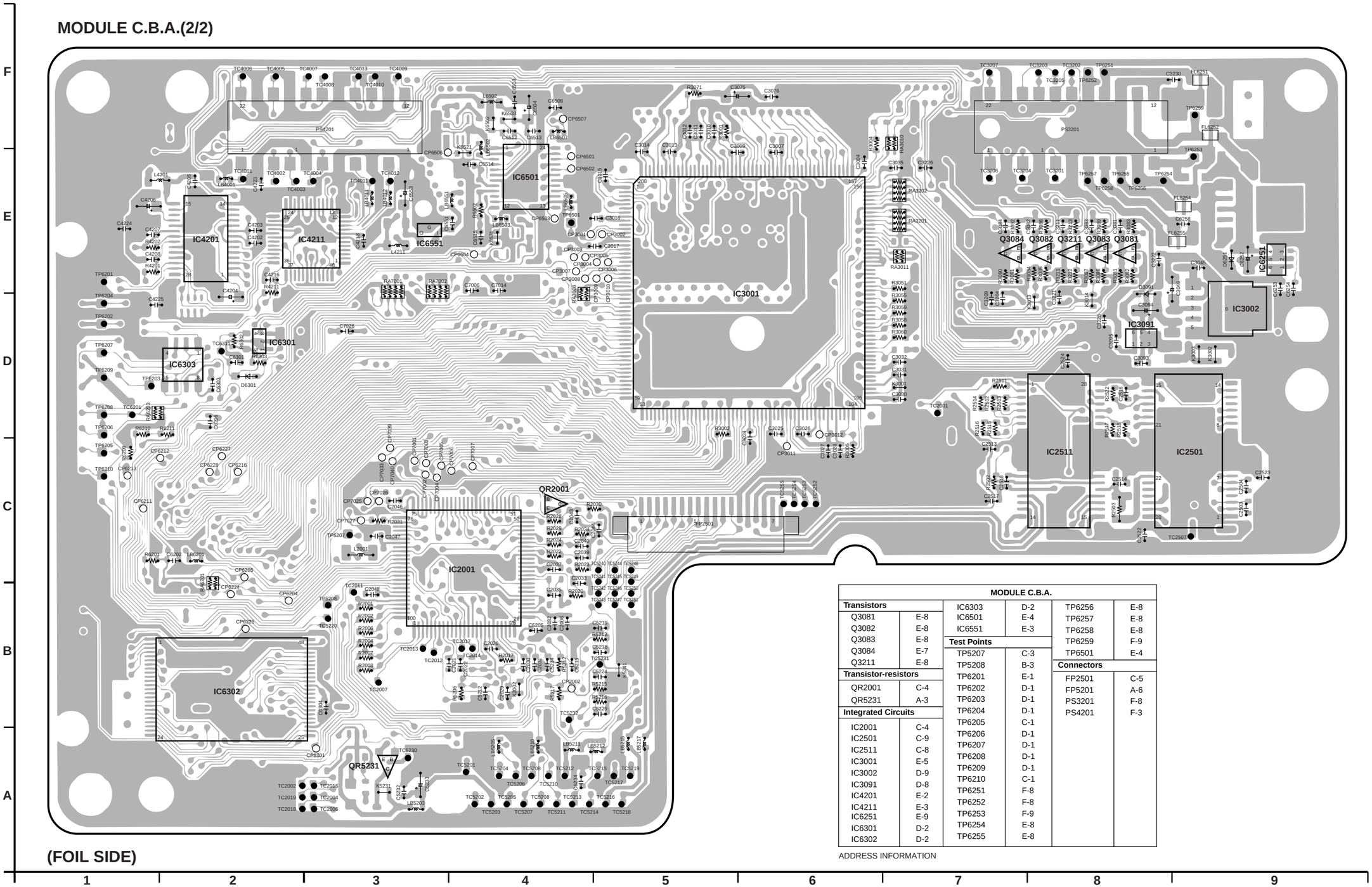

(FOIL SIDE)

MODULE C.B.A.					
Transistors		IC6303	D-2	TP6256	E-8
Q3081	E-8	IC6501	E-4	TP6257	E-8
Q3082	E-8	IC6551	E-3	TP6258	E-8
Q3083	E-8	**Test Points**		TP6259	F-9
Q3084	E-7	TP5207	C-3	TP6501	E-4
Q3211	E-8	TP5208	B-3	**Connectors**	
Transistor-resistors		TP6201	E-1	FP2501	C-5
QR2001	C-4	TP6202	D-1	FP5201	A-6
QR5231	A-3	TP6203	D-1	PS3201	F-8
Integrated Circuits		TP6204	D-1	PS4201	F-3
IC2001	C-4	TP6205	C-1		
IC2501	C-9	TP6206	D-1		
IC2511	C-8	TP6207	D-1		
IC3001	E-5	TP6208	D-1		
IC3002	D-9	TP6209	D-1		
IC3091	D-8	TP6210	C-1		
IC4201	E-2	TP6251	F-8		
IC4211	E-3	TP6252	F-8		
IC6251	E-9	TP6253	F-9		
IC6301	D-2	TP6254	E-8		
IC6302	D-2	TP6255	E-8		

ADDRESS INFORMATION

5. MOTHER C.B.A.

MOTHER C.B.A.

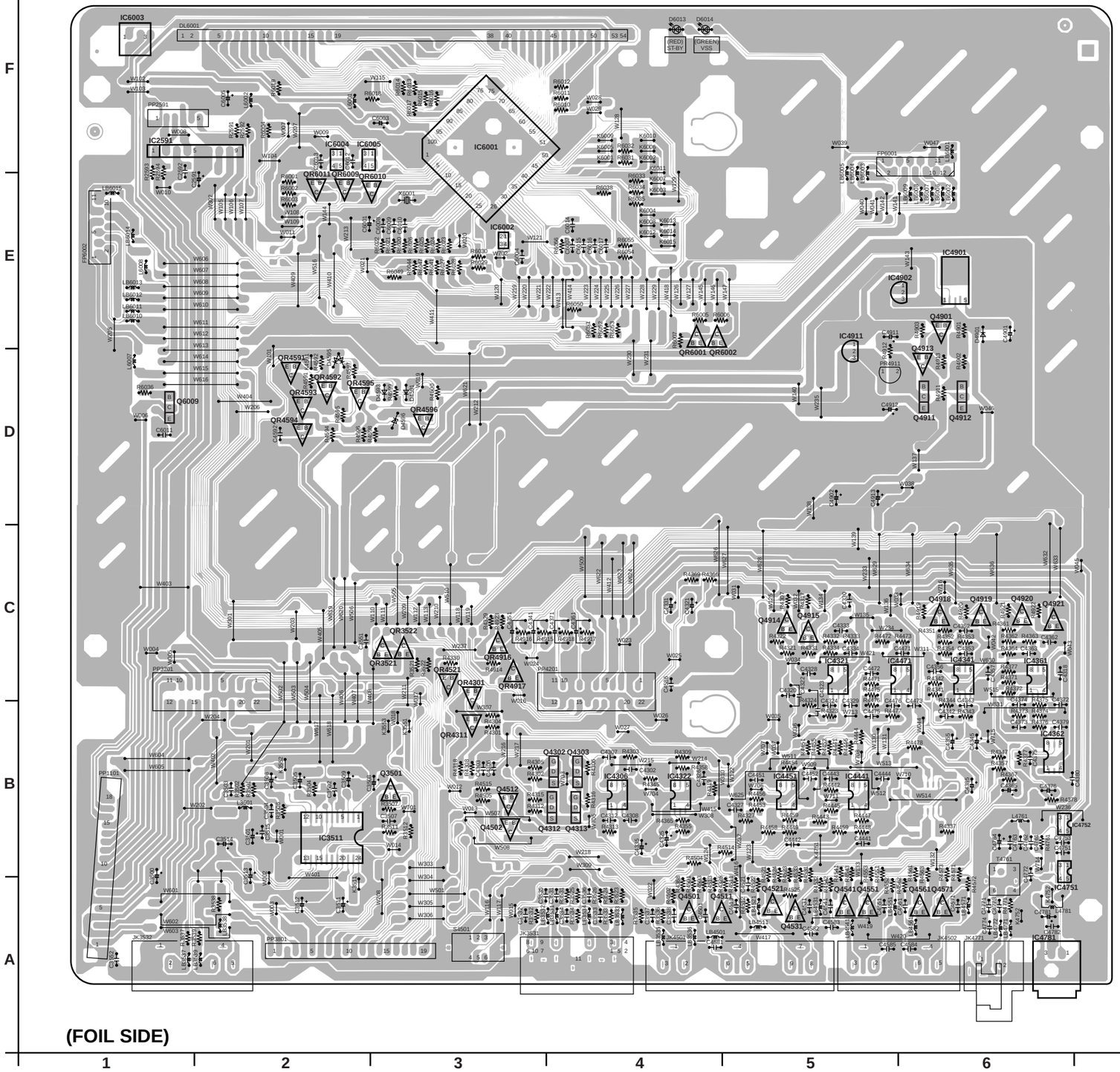

(FOIL SIDE)

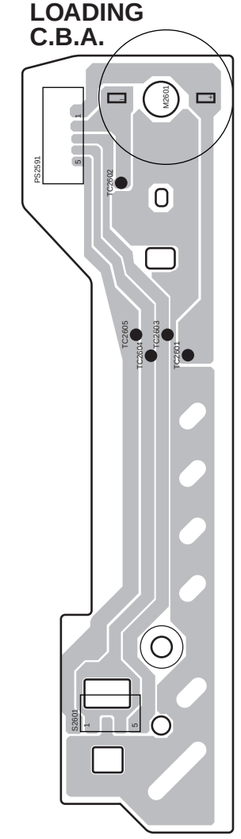

MECHANISM LOADING C.B.A.

MOTHER C.B.A.	
Transistors	
Q3501	B-3
Q4302	B-4
Q4303	B-4
Q4312	B-4
Q4313	B-4
Q4501	A-4
Q4502	B-3
Q4511	A-4
Q4512	B-3
Q4521	A-5
Q4531	A-5
Q4541	A-5
Q4551	A-5
Q4561	A-6
Q4571	A-6
Q4901	E-6
Q4911	D-6
Q4912	D-6
Q4913	D-6
Transistors	
Q4914	C-5
Q4915	C-5
Q4918	C-6
Q4919	C-6
Q4920	C-6
Q4921	C-6
Q6009	D-1
Transistor-resistors	
QR3521	C-3
QR3522	C-3
QR4301	C-3
QR4311	B-3
QR4521	C-3
QR4591	D-2
QR4592	D-2
QR4593	D-2
QR4594	D-2
QR4595	D-2
QR4596	D-3
QR4916	C-3
QR4917	C-3
QR6001	E-4
QR6002	E-4
QR6010	E-2
QR6011	E-2
Integrated Circuits	
IC2591	F-1
IC3511	B-2
IC4306	B-4
IC4321	C-5
IC4322	B-4
IC4341	C-6
IC4361	C-6
IC4362	B-6
IC4441	B-5
IC4451	B-5
IC4471	C-5
IC4751	B-6
IC4752	B-6
IC4781	A-6
IC4901	E-6
IC4902	E-5
IC4911	E-5
IC6001	F-3
IC6002	E-3
IC6003	F-1
IC6004	F-2
IC6005	F-2
Connectors	
FP6001	F-5
FP6002	E-1
PP1101	B-1
PP2591	F-1
PP3201	C-1
PP3801	A-2
PP4201	C-4
JK3531	A-3
JK3532	A-1
JK4501	A-4
JK4502	A-6
JK4771	A-6

ADDRESS INFORMATION

6. FRONT SWITCH AND POWER SWITCH C.B.A.

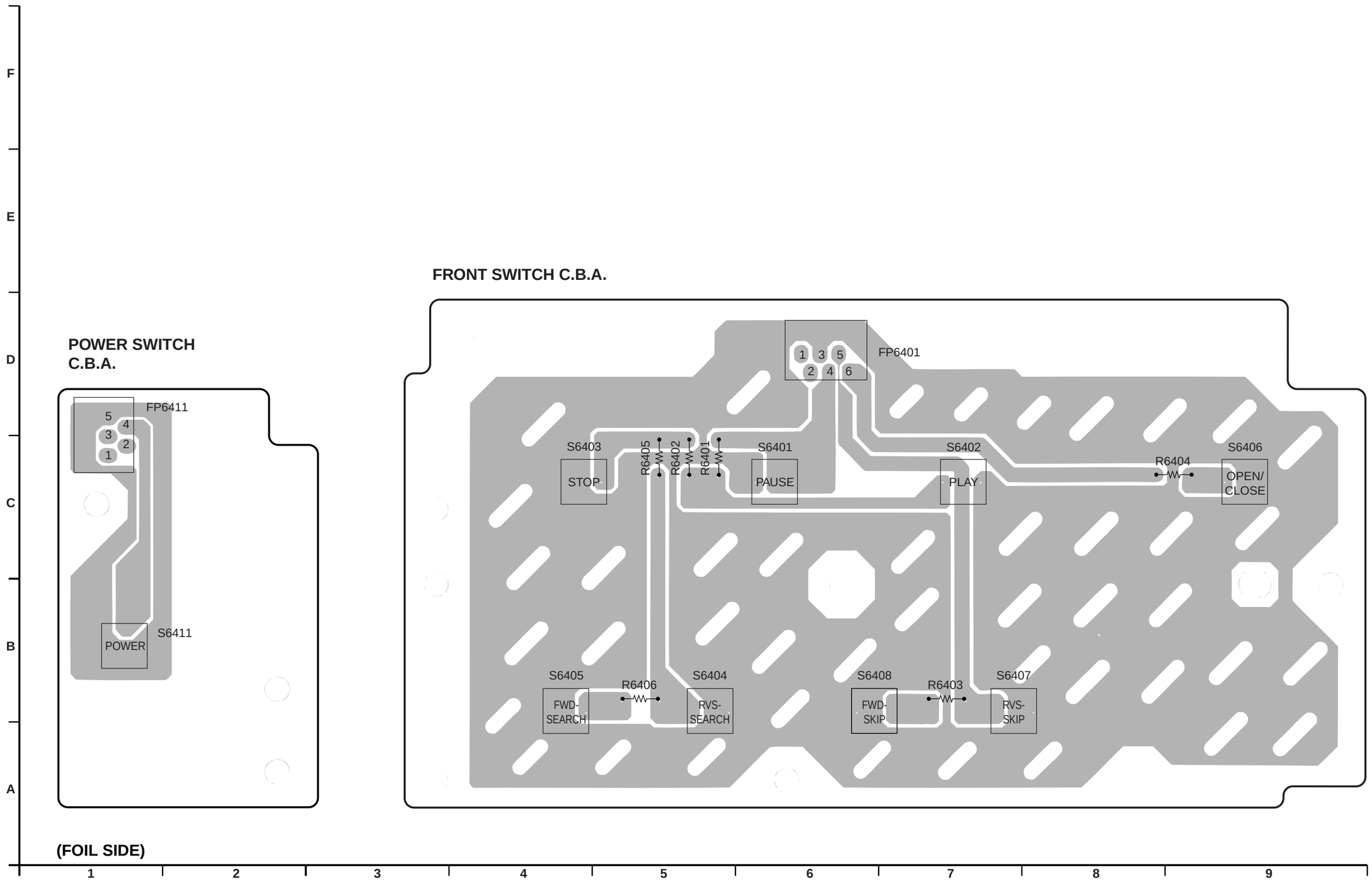

7. SCART C.B.A. (FOR G, B MODELS)

SCART C.B.A.			
Transistors		IC3853	D-9
Q3831	C-1	IC3891	B-1
Q3832	C-1	**Connectors**	
Q3833	C-2	PS3801	A-5
Transistor-resistors		J3871	C-4
QR3832	C-1	J3881	B-4
Integrated Circuits			
IC3801	B-5		
IC3851	C-7		
IC3852	C-8		

ADDRESS INFORMATION

SCART C.B.A.

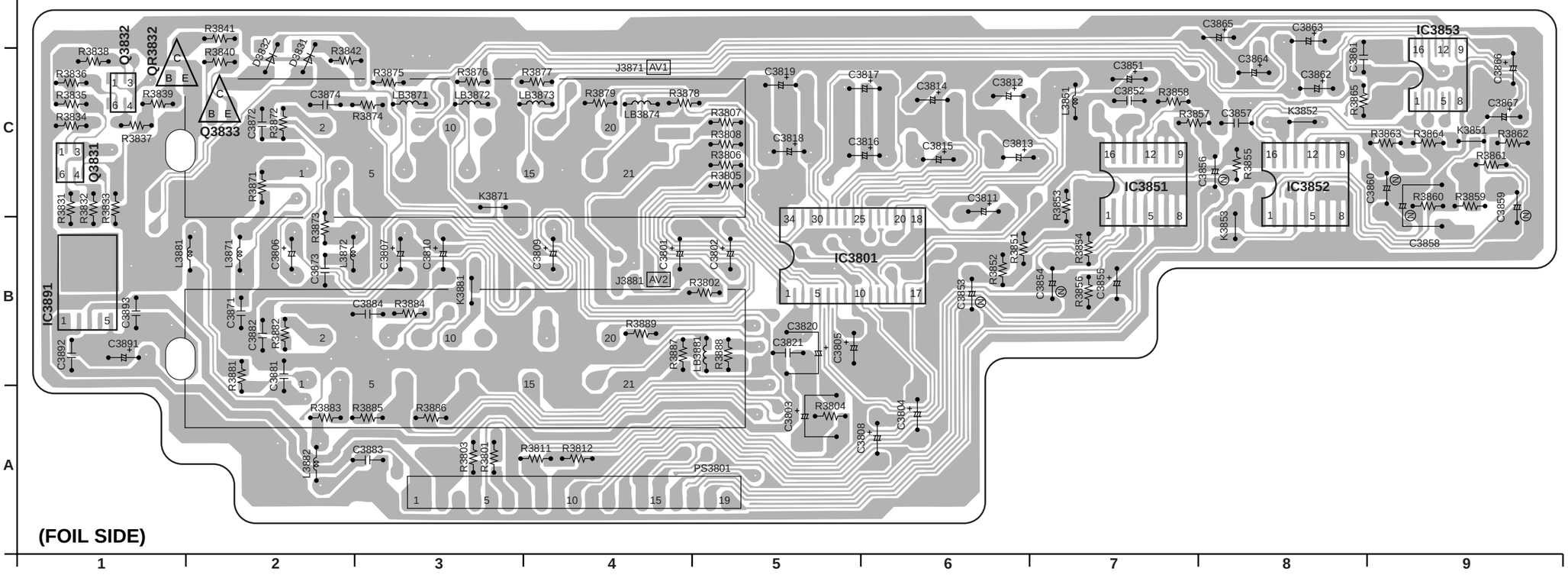

SECTION 4
EXPLODED VIEWS & REPLACEMENT PARTS LIST

1. Electrical Replacement Parts List

■ **WARNING**

Components having special characteristics are marked ⚠ and must be replaced with parts having specifications equal to those originally installed.

ABBREVIATIONS IN THIS LIST ARE AS FOLLOWS:

C.A.EL.CHP	:	CHIP ALUMI. ELECTROLYTIC CAP
C.CE	:	CERAMIC CAP
C.CE.ARRAY	:	CERAMIC CAP ARRAY
C.CE.CHP	:	CHIP CERAMIC CAP
C.CE.ML	:	MULTILAYER CERAMIC CAP
C.CE.M.CHP	:	CHIP MULTILAYER CERAMIC CAP
C.CE.SAFTY	:	RECOGNIZED CERAMIC CAP
C.CE.TUBLR	:	CERAMIC TUBULAR CAP
C.CE.SMI	:	SEMI CONDUCTIVE CERAMIC CAP
C.EL	:	ELECTROLYTIC CAP
C.MICA	:	MICA CAP
C.ML.FLM	:	MULTILAYER FILM CAP
C.MP	:	METALLIZED PAPER CAP
C.MYLAR	:	MYLAR FILM CAP
C.MYLAR.ML	:	MULTILAYER MYLAR FILM CAP
C.PAPER	:	PAPER CAPACITOR
C.PLS	:	POLYSTYRENE FILM CAP
C.POL	:	POLYESTER FILM CAP
C.POLY	:	POLYETHYLENE FILM CAP
C.PP	:	POLYPROPYLENE FILM CAP
C.TNTL	:	TANTALUM CAP
C.TNTL.CHP	:	CHIP TANTALUM CAP
C.TRIM	:	TRIMMER CAP
CN	:	CONNECTOR
CN.BS.PIN	:	CONNECTOR, BASE PIN
CN.CANNON	:	CONNECTOR, CANNON
CN.DIN	:	CONNECTOR, DIN
CN.FLAT	:	CONNECTOR, FLAT CABLE
CN.POST	:	CONNECTOR, BASE POST
COIL.MX.AM	:	COIL, AM MIX
COIL.AT.FM	:	COIL, FM ANTENNA
COIL.DT.FM	:	COIL, FM DETECT
COIL.MX.FM	:	COIL, FM MIX
COIL.OUTPT	:	OUTPUT COIL
DIOD.ARRAY	:	DIODE ARRAY
DIODE.BRG	:	DIODE BRIDGE
DIODE.CHP	:	CHIP DIODE
DIODE.VAR	:	VARACTOR DIODE
DIOD.Z.CHP	:	CHIP ZENER DIODE
DIODE.ZENR	:	ZENER DIODE
DSCR.CE	:	CERAMIC DISCRIMINATOR
FER.BEAD	:	FERRITE BEADS
FER.CORE	:	FERRITE CORE
FET.CHP	:	CHIP FET
FL.DSPLY	:	FLUORESCENT DISPLAY
FLTR.CE	:	CERAMIC FILTER
FLTR.COMB	:	COMB FILTER MODULE
FLTR.LC.RF	:	LC FILTER, EMI
GND.MTL	:	GROUND PLATE
GND.TERM	:	GROUND TERMINAL
HOLDER.FUS	:	FUSE HOLDER
IC.PRTCT	:	IC PROTECTOR
JUMPER.CN	:	JUMPER CONNECTOR
JUMPER.TST	:	JUMPER,TEST POINT
L.DTCT	:	LIGHT DETECTING MODULE
L.EMIT	:	LIGHT EMITTING MODULE
LED.DSPLY	:	LED DISPLAY
LED.INFRD	:	LED, INFRARED
MODUL.RF	:	MODULATOR, RF
PHOT.CPL	:	PHOTO COUPLER
PHOT.INTR	:	PHOTO INTERRUPTER
PHOT.RFLCT	:	PHOTO REFLECTOR
PIN.TEST	:	PIN, TEST POINT
PLST.RIVET	:	PLASCTIC RIVET
R.ARRAY	:	RESISTOR ARRAY
R.CAT	:	CARBON RESISTOR
R.CAR.CHP	:	CHIP RESISTOR
R.CAR.FP	:	FLAME PROOF CARBON RESISTOR
R.FUS	:	FUSABLE RESISTOR
R.MTL.CHP	:	CHIP METAL FILM RESISTOR
R.MTL.FLM	:	METAL FILM RESISTOR
R.MTL.OXD	:	METAL OXIDE FILM RESISTOR
R.MTL.PLAT	:	METAL PLATE RESISTOR
RSNR.CE	:	CERAMIC RESONATOR
RSNR.CRYS	:	CRYSTAL RESONATOR
R.TW.CEM	:	TWIN CEMENT FIXED RESISTOR
R.WW	:	WIRE WOUND RESISTOR
SCR.BND.HD	:	BIND HEAD B-TITE SCREW
SCR.BW.HD	:	BW HEAD TAPPING SCREW
SCR.CUP	:	CUP TITE SCREW
SCR.TERM	:	SCREW TERMINAL
SCR.TR	:	SCREW, TRANSISTOR
SUPRT.PCB	:	SUPPORT, P.C.B.
SURG.PRTCT	:	SURGE PROTECTOR
SW.TACT	:	TACT SWITCH
SW.LEAF	:	LEAF SWITCH
SW.LEVER	:	LEVER SWITCH
SW.MICRO	:	MICRO SWITCH
SW.PUSH	:	PUSH SWITCH
SW.RT.ENC	:	ROTARY ENCODER
SW.RT.MTR	:	ROTARY SWITCH WITH MOTOR
SW.RT	:	ROTARY SWITCH
SW.SLIDE	:	SLIDE SWITCH
TERM.SP	:	SPEAKER TERMINAL
TERM.WRAP	:	WRAPPING TERMINAL
THRMST.CHP	:	CHIP THERMISTOR
TR.CHP	:	CHIP TRANSISTOR
TR.DGT	:	DIGITAL TRANSISTOR
TR.DGT.CHP	:	CHIP DIGITAL TRANSISTOR
TRANS	:	TRANSFORMER
TRANS.PULS	:	PULSE TRANSFORMER
TRANS.PWR	:	POWER TRANSFORMER ASS'Y
TUNER.AM	:	TUNER PACK, AM
TUNER.FM	:	TUNER PACK, FM
TUNER.PK	:	FRONT-END TUNER PACK
VR	:	ROTARY POTENTIOMETER
VR.MTR	:	POTENTIOMETER WITH MOTOR
VR.SW	:	POTENTIOMETER WITH ROTARY SW
VR.SLIDE	:	SLIDE POTENTIOMETER
VR.TRIM	:	TRIMMER POTENTIOMETER

	SCHM REF.	PART NO.	DESCRIPTION			REMARKS
*		AAX16300	P.C.B.	MOTHER(U)		VEP99144M
*		AAX18150	P.C.B.	MOTHER(GB)		VEP99144R
*		AAX18140	P.C.B.	MOTHER(A)		VEP99144P
*		AAX18130	P.C.B.	MOTHER(R)		VEP99144N
⚠ *		AAX16260	P.C.B.	POWER SUPPLY(U)		VEP91250A
*		AAX18240	P.C.B.	POWER SUPPLY(AGB)		VEP91252A
*		AAX18230	P.C.B.	POWER SUPPLY(R)		VEP91251A
*		AAX16270	P.C.B.	MODULE(U)		VEP96572F
*		AAX18160	P.C.B.	MODULE(GB)		VEP96572G
*		AAX18180	P.C.B.	MODULE(A)		VEP96572L
*		AAX18170	P.C.B.	MODULE(R)		VEP96572H
		AAX18390	P.C.B.	SCART(GB)		VEP93332B
*		AAX16280	P.C.B.	FRONT SWITCH		VEP96589A
*		AAX16290	P.C.B.	POWER SWITCH		VEP96590A
⚠	C1001	AAX05310	C.POL	0.068uF	250V(UAR)	VCF0183M683
⚠	C1001	AAX18420	C.POL	0.01uF	250V(GB)	VCF0183M104
⚠	C1002	AAX18420	C.POL	0.01uF	250V(GB)	VCF0183M104
⚠	C1002	AAX05310	C.POL	0.068uF	250V	VCF0183M683
⚠	C1003	NX702590	C.CE	470pF	250V(GB)	VCK0286B471
⚠	C1003	AAX05320	C.CE	1000pF	250V(UAR)	VCK0299E102
⚠	C1004	NX702590	C.CE	470pF	250V(GB)	VCK0286B471
⚠	C1005	AAX05330	C.CE	2200pF	250V(UAR)	VCK0299E222
⚠	C1005	NX702600	C.CE	1000pF	250V(GB)	VCK0286E102
	C1013	FX612650	C.EL	68uF	400V(GB)	ECEC2GG680
	C1014	NX703920	C.EL	100uF	250V(UAR)	ECA2EGE101
	C1021	AAX18400	C.CE	0.01uF	250V(GB)	VCK0106K221
	C1021	NX704010	C.CE	470pF	250V(UAR)	VCK0266K471
	C1031	NX704000	C.CE	1800pF	250V	VCK0266K182
	C1041	NX704190	C.POL	0.022uF	50V	ECQB1H223JF
	C1051	FX612840	C.POL	0.1uF	50V	ECQB1H104JF
*	C1052	AAX15540	C.POL	0.068uF	50V	ECQB1H683JF
	C1053	FX612840	C.POL	0.1uF	50V	ECQB1H104JF
*	C1061	AAX16190	C.EL	47uF	6.3V	VCEA0JJC470
	C1101	AAX06090	C.POL	0.1uF	50V	ECQV1H104JL
	C1102	NX704190	C.POL	0.022uF	50V	ECQB1H223JF
*	C1111	AAX16210	C.EL	1000uF	10V	VCEA1AJH102
*	C1112	AAX16200	C.EL	1000uF	10V	VCEA1AJC102
*	C1115	AAX15530	C.EL	470uF	25V	ECFR1E104ZF5
	C1116	AAX05260	C.EL	220uF	10V	VCEA1AJC221
	C1117	FX611470	C.EL	1000uF	6.3V(UAR)	ECA0JM102
	C1117	AAX18290	C.EL	220uF	10V(GB)	ECA1APX221B
	C1121	AAX16210	C.EL	1000uF	10V(GB)	VCEA1AJH102
	C1121	FX612720	C.EL	330uF	10V(UAR)	VCEA1AJH331
*	C1122	AAX16200	C.EL	1000uF	10V	VCEA1AJC102
	C1125	FX611470	C.EL	1000uF	6.3VCH	ECA0JM102
	C1131	AAX05300	C.EL	150uF	35V	VCEA1VJH151
	C1133	FX612760Q	C.EL	33uF	25V	VCEA1EJC330
	C1141	AAX05300	C.EL	150uF	35V	VCEA1VJH151
	C1143	FX612760	C.EL	33uF	25V	VCEA1EJC330
	C1151	AAX05290	C.EL	270uF	25V	VCEA1EJH271
	C1153	FX612750	C.EL	220uF	25V	VCEA1EJC221
	C1154	AAX05280	C.EL	220uF	16V	VCEA1CJC221
*	C1161	AAX16230	C.EL	56uF	50V	VCEA1HJH560

	SCHM REF.	PART NO.	DESCRIPTION			REMARKS
*	C1171	AAX16220	C.EL	180uF	10V	VCEA1AJH181
	C2001	NX702100	C.EL	100uF	6.3V	EEVHB0J101
	C2002	FX612220	C.CE	0.1uF	16V CH	ECUX1C104ZFV
	C2003	NX702100	C.EL	100uF	6.3V	EEVHB0J101
	C2004	FX612220	C.CE	0.1uF	16V CH	ECUX1C104ZFV
	C2005	NX702100	C.EL	100uF	6.3V	EEVHB0J101
	C2006	FX612210	C.CE	0.1uF	16V CH	ECUX1C104KBV
	C2007	FX612220	C.CE	0.1uF	16V CH	ECUX1C104ZFV
	C2012	FX612430	C.CE	330P	50V CH	ECUX1H331JCV
	C2013	FX612350	C.CE	120pF	50V CH	ECUX1H121JCV
	C2014	FX612350	C.CE	120pF	50V CH	ECUX1H121JCV
	C2015	FX612350	C.CE	120pF	50V CH	ECUX1H121JCV
	C2016	NX702500	C.CE	10pF	50V CH	ECUX1H101JCV
	C2017	NX702500	C.CE	10pF	50V CH	ECUX1H101JCV
	C2018	FG212390	C.CE	390pF	50V	ECUX1H391JCV
	C2019	FG212390	C.CE	390pF	50V	ECUX1H391JCV
	C2020	FX612220	C.CE	0.1uF	16V CH	ECUX1C104ZFV
	C2021	FX612210	C.CE	0.1uF	16V CH	ECUX1C104KBV
	C2022	FX612210	C.CE	0.1uF	16V CH	ECUX1C104KBV
	C2023	NX702560	C.CE	6800pF	50V CH	ECUX1H682KBV
	C2024	FX612480	C.CE	680pF	50V CH	ECUX1H681JCV
	C2025	FX612220	C.CE	0.1uF	16V CH	ECUX1C104ZFV
	C2026	FX612220	C.CE	0.1uF	16V CH	ECUX1C104ZFV
	C2028	FX612220	C.CE	0.1uF	16V CH	ECUX1C104ZFV
	C2029	FX612440	C.CE	47pF	50V CH	ECUX1H470JCV
	C2030	FX612240	C.CE	0.018uF	16V CH	ECUX1C183KBV
	C2031	NX702510	C.CE	1000pF	50V CH	ECUX1H102JCV
	C2032	FX612220	C.CE	0.1uF	16V CH	ECUX1C104ZFV
	C2033	FX612040	C.CE	0.47uF	16V CH	ECUM1C474KBN
	C2034	Fi544100	C.CE	0.01uF	16V	ECUX1C103KBV
	C2037	FX612220	C.CE	0.1uF	16V CH	ECUX1C104ZFV
*	C2038	AAX15610	C.CE	0.047uF	16V	ECUX1C473KBV
	C2039	AAX05620	C.CE	0.039uF	16V CH	ECUX1C393KBV
*	C2040	AAX15620	C.CE	8200pF	50V	ECUX1H822KBV
	C2041	FX612220	C.CE	0.1uF	16V CH	ECUX1C104ZFV
	C2042	FX612210	C.CE	0.1uF	16V CH	ECUX1C104KBV
*	C2043	AAX15610	C.CE	0.047uF	16V	ECUX1C473KBV
	C2044	FX612210	C.CE	0.1uF	16V CH	ECUX1C104KBV
	C2045	FX612220	C.CE	0.1uF	16V CH	ECUX1C104ZFV
	C2046	FX612220	C.CE	0.1uF	16V CH	ECUX1C104ZFV
	C2047	FX612220	C.CE	0.1uF	16V CH	ECUX1C104ZFV
	C2048	FX612220	C.CE	0.1uF	16V CH	ECUX1C104ZFV
	C2051	FX612220	C.CE	0.1uF	16V CH	ECUX1C104ZFV
*	C2500	AAX15520	C.EL	100uF	16V	ECEV1CA101W
	C2501	NX702100	C.EL	100uF	6.3V	EEVHB0J101
	C2502	FX611790	C.EL	330uF	6.3V CH	ECEV0JA331
	C2503	FX612310	C.CE	0.01uF	50V CH	ECUX1H103KBV
	C2504	FX612310	C.CE	0.01uF	50V CH	ECUX1H103KBV
	C2505	FX612310	C.CE	0.01uF	50V CH	ECUX1H103KBV
	C2506	FX612220	C.CE	0.1uF	16V CH	ECUX1C104ZFV
	C2507	FX612210	C.CE	0.1uF	16V CH	ECUX1C104KBV
	C2508	FX612210	C.CE	0.1uF	16V CH	ECUX1C104KBV
	C2509	FX612220	C.CE	0.1uF	16V CH	ECUX1C104ZFV

*New Parts

	SCHM REF.	PART NO.	DESCRIPTION			REMARKS
	C2513	FX612220	C.CE	0.1uF	16V CH	ECUX1C104ZFV
	C2514	FX612220	C.CE	0.1uF	16V CH	ECUX1C104ZFV
	C2515	FX612220	C.CE	0.1uF	16V CH	ECUX1C104ZFV
	C2516	FX612220	C.CE	0.1uF	16V CH	ECUX1C104ZFV
	C2517	FX612220	C.CE	0.1uF	16V CH	ECUX1C104ZFV
	C2518	FX612220	C.CE	0.1uF	16V CH	ECUX1C104ZFV
	C2521	FX612220	C.CE	0.1uF	16V CH	ECUX1C104ZFV
	C2522	FX612220	C.CE	0.1uF	16V CH	ECUX1C104ZFV
	C2523	FX612220	C.CE	0.1uF	16V CH	ECUX1C104ZFV
	C2524	FX612220	C.CE	0.1uF	16V CH	ECUX1C104ZFV
	C2525	FX612220	C.CE	0.1uF	16V CH	ECUX1C104ZFV
	C2591	NX702030	C.EL	100uF	16V	ECEA1CKA101
	C2592	FX612090	C.CE	0.1uF	50V CH	ECUM1H104ZFN
	C3001	FX611790	C.EL	330uF	6.3V CH	ECEV0JA331
	C3002	FX611790	C.EL	330uF	6.3V CH	ECEV0JA331
	C3003	FX611790	C.EL	330uF	6.3V CH	ECEV0JA331
*	C3004	AAX15600	C.CE	1.0uF	10V	ECUX1A105ZFV
	C3005	FX612220	C.CE	0.1uF	16V CH	ECUX1C104ZFV
	C3006	FX612220	C.CE	0.1uF	16V CH	ECUX1C104ZFV
*	C3007	AAX15600	C.CE	1.0uF	10V	ECUX1A105ZFV
*	C3008	AAX15600	C.CE	1.0uF	10V	ECUX1A105ZFV
	C3009	FX612220	C.CE	0.1uF	16V CH	ECUX1C104ZFV
	C3010	FX612220	C.CE	0.1uF	16V CH	ECUX1C104ZFV
	C3011	FX612220	C.CE	0.1uF	16V CH	ECUX1C104ZFV
*	C3012	AAX15600	C.CE	1.0uF	10V	ECUX1A105ZFV
*	C3012	AAX15600	C.CE	1.0uF	10V	ECUX1A105ZFV
	C3014	FX612220	C.CE	0.1uF	16V CH	ECUX1C104ZFV
	C3015	FX612220	C.CE	0.1uF	16V CH	ECUX1C104ZFV
*	C3016	AAX15600	C.CE	1.0uF	10V	ECUX1A105ZFV
	C3017	FX612220	C.CE	0.1uF	16V CH	ECUX1C104ZFV
	C3018	FX612220	C.CE	0.1uF	16V CH	ECUX1C104ZFV
*	C3019	AAX15600	C.CE	1.0uF	10V	ECUX1A105ZFV
*	C3020	AAX15600	C.CE	1.0uF	10V	ECUX1A105ZFV
	C3021	FX612220	C.CE	0.1uF	16V CH	ECUX1C104ZFV
	C3022	FX612220	C.CE	0.1uF	16V CH	ECUX1C104ZFV
*	C3024	AAX15600	C.CE	1.0uF	10V	ECUX1A105ZFV
	C3025	FX612220	C.CE	0.1uF	16V CH	ECUX1C104ZFV
*	C3026	AAX15600	C.CE	1.0uF	10V	ECUX1A105ZFV
	C3027	FX612220	C.CE	0.1uF	16V CH	ECUX1C104ZFV
	C3028	FX612220	C.CE	0.1uF	16V CH	ECUX1C104ZFV
	C3029	FX612220	C.CE	0.1uF	16V CH	ECUX1C104ZFV
*	C3030	AAX15600	C.CE	1.0uF	10V	ECUX1A105ZFV
	C3031	FX612220	C.CE	0.1uF	16V CH	ECUX1C104ZFV
	C3032	FX612220	C.CE	0.1uF	16V CH	ECUX1C104ZFV
	C3033	FX612220	C.CE	0.1uF	16V CH	ECUX1C104ZFV
	C3033	FX612220	C.CE	0.1uF	16V CH	ECUX1C104ZFV
	C3034	FX612220	C.CE	0.1uF	16V CH	ECUX1C104ZFV
	C3035	FX612220	C.CE	0.1uF	16V CH	ECUX1C104ZFV
	C3036	FX612380	C.CE	22pF	50V CH	ECUX1H220JCV
	C3042	FX612220	C.CE	0.1uF	16V CH	ECUX1C104ZFV
	C3043	FX612220	C.CE	0.1uF	16V CH	ECUX1C104ZFV
	C3045	FX612220	C.CE	0.1uF	16V CH	ECUX1C104ZFV
*	C3046	AAX15550	C.TNTL.CHP	10uF	6.3V	ECST0JY106Z

	SCHM REF.	PART NO.	DESCRIPTION			REMARKS
	C3051	FX611790	C.EL	330uF	6.3VCH	ECEV0JA331
	C3052	FX611980	C.CE	1uF	10V CH	ECUM1A105KBN
	C3053	FX611980	C.CE	1uF	10V CH	ECUM1A105KBN
	C3054	FX611980	C.CE	1uF	10V CH	ECUM1A105KBN
	C3055	FX611980	C.CE	1uF	10V CH	ECUM1A105KBN
	C3056	FX612220	C.CE	0.1uF	16V CH	ECUX1C104ZFV
	C3057	FX612220	C.CE	0.1uF	16V CH	ECUX1C104ZFV
	C3058	FX612220	C.CE	0.1uF	16V CH	ECUX1C104ZFV
	C3059	FX612220	C.CE	0.1uF	16V CH	ECUX1C104ZFV
	C3060	FX612220	C.CE	0.1uF	16V CH	ECUX1C104ZFV
	C3061	FX612220	C.CE	0.1uF	16V CH	ECUX1C104ZFV
	C3062	FX612220	C.CE	0.1uF	16V CH	ECUX1C104ZFV
	C3063	FX612220	C.CE	0.1uF	16V CH	ECUX1C104ZFV
	C3064	FX612220	C.CE	0.1uF	16V CH	ECUX1C104ZFV
*	C3065	AAX16240	C.TNTL.CHP	10uF	10V	VCS1AS106
	C3066	FX612220	C.CE	0.1uF	16V CH	ECUX1C104ZFV
	C3071	FX612220	C.CE	0.1uF	16V(GB)	ECUX1C104ZFV
	C3072	FX612220	C.CE	0.1uF	16V(GB)	ECUX1C104ZFV
	C3073	FX612220	C.CE	0.1uF	16V(GB)	ECUX1C104ZFV
	C3074	FX612220	C.CE	0.1uF	16V(GB)	ECUX1C104ZFV
	C3075	AAX16240	C.TNTL.CHP	10uF	10V(GB)	VCS1AS106
	C3076	FX612220	C.CE	0.1uF	16V(GB)	ECUX1C104ZFV
	C3081	FX612220	C.CE	0.1uF	16V CH	ECUX1C104ZFV
	C3082	FX612220	C.CE	0.1uF	16V CH	ECUX1C104ZFV
	C3083	FX612220	C.CE	0.1uF	16V CH	ECUX1C104ZFV
	C3084	FX612220	C.CE	0.1uF	16V CH	ECUX1C104ZFV
	C3085	FX612220	C.CE	0.1uF	16V CH	ECUX1C104ZFV
	C3091	NX702100	C.EL	100uF	6.3V	EEVHB0J101
	C3092	NX702100	C.EL	100uF	6.3V	EEVHB0J101
	C3093	FX612220	C.CE	0.1uF	16V CH	ECUX1C104ZFV
*	C3094	AAX16240	C.TNTL.CHP	10uF	10V	VCS1AS106
	C3095	FX612220	C.CE	0.1uF	16V CH	ECUX1C104ZFV
	C3221	FX612220	C.CE	0.1uF	16V CH	ECUX1C104ZFV
	C3222	FX612220	C.CE	0.1uF	16V CH	ECUX1C104ZFV
	C3223	FX612220	C.CE	0.1uF	16V CH	ECUX1C104ZFV
	C3224	FX612220	C.CE	0.1uF	16V CH	ECUX1C104ZFV
	C3225	FX612220	C.CE	0.1uF	16V CH	ECUX1C104ZFV
	C3226	FX612220	C.CE	0.1uF	16V CH	ECUX1C104ZFV
	C3227	FX612220	C.CE	0.1uF	16V CH	ECUX1C104ZFV
	C3228	FX612220	C.CE	0.1uF	16V CH	ECUX1C104ZFV
	C3229	FX612220	C.CE	0.1uF	16V CH	ECUX1C104ZFV
	C3230	FX612220	C.CE	0.1uF	16V CH	ECUX1C104ZFV
	C3231	FX612220	C.CE	0.1uF	16V CH	ECUX1C104ZFV
	C3500	FX611490	C.EL	470uF	6.3V	ECA0JM471
	C3501	FX611480	C.EL	220uF	6.3V	ECA0JM221
	C3502	FX612080	C.CE	0.01uF	50V CH	ECUM1H103ZFN
*	C3503	AAX15590	C.CE	470pF	50V	ECUM1H471KBN
	C3504	FX612070	C.CE	0.01uF	50V CH	ECUM1H103KBN
	C3505	NX702060	C.EL	47uF	16V(UAR)	ECEA1CKA470
	C3506	NX702060	C.EL	47uF	16V(UAR)	ECEA1CKA470
	C3507	FX612080	C.CE	0.01uF	50V CH	ECUM1H103ZFN
	C3508	FX611490	C.EL	470uF	6.3V	CA0JM471
	C3509	FX611490	C.EL	470uF	6.3V	ECA0JM471

*New Parts

SCHM REF.	PART NO.	DESCRIPTION			REMARKS
C3511	FX611470	C.EL	1000uF	6.3VCH	ECA0JM102
C3512	FX611470	C.EL	1000uF	6.3VCH	ECA0JM102
C3513	NX702030	C.EL	100uF	16V(UAR)	ECEA1CKA101
C3514	NX702030	C.EL	100uF	16V(UAR)	ECEA1CKA101
C3515	FX612080	C.CE	0.01uF	50V CH	ECUM1H103ZFN
C3536	FX612070	C.CE	0.01uF	50V CH	ECUM1H103KBN
C3551	FX612080	C.CE	0.01uF	50V CH	ECUM1H103ZFN
C3552	FX612080	C.CE	0.01uF	50V CH	ECUM1H103ZFN
C3801	AAX18340	C.EL	47uF	16V(GB)	RCE1CKA470BG
C3802	AAX18340	C.EL	47uF	16V(GB)	RCE1CKA470BG
C3803	AAX18340	C.EL	47uF	16V(GB)	RCE1CKA470BG
C3804	AAX18330	C.EL	1uF	50V(GB)	ECEA1HKS010
C3805	AAX18320	C.EL	22uF	16V(GB)	ECEA1CKS220
C3806	AAX18330	C.EL	1uF	50V(GB)	ECEA1HKS010
C3807	AAX18330	C.EL	1uF	50V(GB)	ECEA1HKS010
C3808	AAX18330	C.EL	1uF	50V(GB)	ECEA1HKS010
C3809	AAX18330	C.EL	1uF	50V(GB)	ECEA1HKS010
C3810	AAX18330	C.EL	1uF	50V(GB)	ECEA1HKS010
C3811	FX611600	C.EL	220uF	6.3V(GB)	ECEA1AKS221
C3812	FX611600	C.EL	220uF	6.3V(GB)	ECEA1AKS221
C3813	FX611600	C.EL	220uF	6.3V(GB)	ECEA1AKS221
C3814	FX611600	C.EL	220uF	6.3V(GB)	ECEA1AKS221
C3815	AAX18340	C.EL	47uF	16V(GB)	RCE1CKA470BG
C3816	AAX18300	C.EL	330uF	6.3V(GB)	ECEA0JKS331
C3817	FX611600	C.EL	220uF	10V(GB)	ECEA1AKS221
C3818	AAX18300	C.EL	330uF	6.3V(GB)	ECEA0JKS331
C3819	AAX18300	C.EL	330uF	6.3V(GB)	ECEA0JKS331
C3820	AAX18310	C.EL	100uF	16V(GB)	ECEA1CKS101
C3821	FX612090	C.CE	0.1uF	50V(GB)	ECUM1H104ZFN
C3851	FX611600	C.EL	220uF	6.3V(GB)	ECEA1AKS221
C3852	FX612090	C.CE	0.1uF	50V(GB)	ECUM1H104ZFN
C3854	AAX05190	C.EL	47uF	6.3V(GB)	ECEA1AKN470
C3861	FX612090	C.CE	0.1uF	50V(GB)	ECUM1H104ZFN
C3862	FX611590	C.EL	100uF	6.3V(GB)	ECEA0JKS101
C3863	AAX18320	C.EL	22uF	16V(GB)	ECEA1CKS220
C3864	FX611590	C.EL	100uF	6.3V(GB)	ECEA0JKS101
C3865	AAX18320	C.EL	22uF	16V(GB)	ECEA1CKS220
C3866	FX611590	C.EL	100uF	6.3V(GB)	ECEA0JKS101
C3867	AAX18320	C.EL	22uF	16V(GB)	ECEA1CKS220
C3871	FX612050	C.CE	100pF	50V(GB)	ECUM1H101JCN
C3872	AAX05590	C.CE	470pF	50V(GB)	ECUM1H471JCN
C3873	FX612050	C.CE	100pF	50V(GB)	ECUM1H101JCN
C3874	AAX05590	C.CE	470pF	50V(GB)	ECUM1H471JCN
C3882	AAX05590	C.CE	470pF	50V(GB)	ECUM1H471JCN
C3884	AAX05590	C.CE	470pF	50V(GB)	ECUM1H471JCN
C3891	AAX18310	C.EL	100uF	16V(GB)	ECEA1CKS101
C3892	FX612090	C.CE	0.1uF	50V(GB)	ECUM1H104ZFN
C3893	FX612090	C.CE	0.1uF	50V(GB)	ECUM1H104ZFN
C4201	FX612660	C.EL	1000uF	6.3V	ECEV0JA102
C4202	FX612220	C.CE	0.1uF	16V CH	ECUX1C104ZFV
C4203	FX612220	C.CE	0.1uF	16V CH	ECUX1C104ZFV
* C4204	AAX16240	C.TNTL.CHP	10uF	10V	VCS1AS106
C4205	FX612220	C.CE	0.1uF	16V CH	ECUX1C104ZFV

SCHM REF.	PART NO.	DESCRIPTION			REMARKS
* C4206	AAX16240	C.TNTL.CHP	10uF	10V	VCS1AS106
C4207	FX612220	C.CE	0.1uF	16V CH	ECUX1C104ZFV
C4208	FX612220	C.CE	0.1uF	16V CH	ECUX1C104ZFV
C4209	FX612220	C.CE	0.1uF	16V CH	ECUX1C104ZFV
C4221	FX612220	C.CE	0.1uF	16V CH	ECUX1C104ZFV
C4222	FX612220	C.CE	0.1uF	16V CH	ECUX1C104ZFV
C4223	FX612220	C.CE	0.1uF	16V CH	ECUX1C104ZFV
C4224	FX612220	C.CE	0.1uF	16V CH	ECUX1C104ZFV
C4225	FX612220	C.CE	0.1uF	16V CH	ECUX1C104ZFV
C4320	FX612060	C.CE	1000pF	50V CH	ECUM1H102JCN
* C4321	AAX15510	C.EL	22uF	16V	ECA1CAK220X
C4324	FX612050	C.CE	100pF	50V CH	ECUM1H101JCN
C4325	FX611550	C.EL	47uF	16V	ECA1CAK470X
C4328	FX612090	C.CE	0.1uF	50V CH	ECUM1H104ZFN
C4329	FX612090	C.CE	0.1uF	50V CH	ECUM1H104ZFN
C4330	FX612060	C.CE	1000pF	50V CH	ECUM1H102JCN
* C4331	AAX15510	C.EL	22uF	16V	ECA1CAK220X
C4334	FX612050	C.CE	100pF	50V CH	ECUM1H101JCN
C4335	FX611550	C.EL	47uF	16V	ECA1CAK470X
C4385	FX611550	C.EL	47uF	16V	ECA1CAK470X
* C4471	AAX15580	C.CE	0.033uF	50V	ECUM1H333KBN
C4472	FX612090	C.CE	0.1uF	50V CH	ECUM1H104ZFN
C4473	FX612090	C.CE	0.1uF	50V CH	ECUM1H104ZFN
* C4475	AAX15570	C.CE	0.1uF	50V	ECUM1H104KBN
C4476	FX612070	C.CE	0.01uF	50V CH	ECUM1H103KBN
C4501	FX612060	C.CE	1000pF	50V CH	ECUM1H102JCN
C4511	FX612060	C.CE	1000pF	50V CH	ECUM1H102JCN
C4531	FX612060	C.CE	1000pF	50V CH	ECUM1H102JCN
C4581	FX612090	C.CE	0.1uF	50V CH	ECUM1H104ZFN
C4582	FX612090	C.CE	0.1uF	50V CH	ECUM1H104ZFN
C4586	FX612090	C.CE	0.1uF	50V CH	ECUM1H104ZFN
C4592	FX612090	C.CE	0.1uF	50V CH	ECUM1H104ZFN
C4781	FX611740	C.EL	4.7uF	50V	ECEA1HKA4R7
C4782	FX612090	C.CE	0.1uF	50V CH	ECUM1H104ZFN
C4902	FX611530	C.EL	100uF	16V	ECA1CAK101X
C4913	FX611530	C.EL	100uF	16V	ECA1CAK101X
C5201	FX611880	C.EL	33uF	6.3V	EEVHB0J330
C5202	FX612220	C.CE	0.1uF	16V CH	ECUX1C104ZFV
C5203	FX612220	C.CE	0.1uF	16V CH	ECUX1C104ZFV
C5204	FX611880	C.EL	33uF	6.3V	EEVHB0J330
C5205	FX612220	C.CE	0.1uF	16V CH	ECUX1C104ZFV
C5211	AAX05250	C.EL	47uF	6.3V	EEVHB0J470
C5212	FX612390	C.CE	220pF	50V CH	ECUX1H221JCV
C5213	FX612210	C.CE	0.1uF	16V CH	ECUX1C104KBV
C5214	FX612220	C.CE	0.1uF	16V CH	ECUX1C104ZFV
C5215	FX612220	C.CE	0.1uF	16V CH	ECUX1C104ZFV
C5216	NX702510	C.CE	1000pF	50V CH	ECUX1H102JCV
C5217	FX612210	C.CE	0.1uF	16V CH	ECUX1C104KBV
C5218	AAX05640	C.CE	18pF	50V CH	ECUX1H180JCV
C5219	NX702540	C.CE	1800pF	50V CH	ECUX1H182KBV
C5220	NX702500	C.CE	10pF	50V CH	ECUX1H101JCV
C5221	FX611800	C.EL	39pF	50V CH	ECUX1H390JCV
* C5222	AAX15560	C.CE	0.47uF	10V	ECUM1A474KBV

*New Parts

	SCHM REF.	PART NO.	DESCRIPTION			REMARKS
*	C5223	AAX15560	C.CE	0.47uF	10V	ECUM1A474KBV
	C5224	FX612390	C.CE	220pF	50V CH	ECUX1H221JCV
	C5225	FX612390	C.CE	220pF	50V CH	ECUX1H221JCV
	C5226	FX612210	C.CE	0.1uF	16V CH	ECUX1C104KBV
	C5227	FX612220	C.CE	0.1uF	16V CH	ECUX1C104ZFV
	C5232	FX612220	C.CE	0.1uF	16V CH	ECUX1C104ZFV
*	C5233	AAX16240	C.TNTL.CHP	10uF	10V	VCS1AS106
	C5234	FX612220	C.CE	0.1uF	16V CH	ECUX1C104ZFV
	C5241	FX612220	C.CE	0.1uF	16V CH	ECUX1C104ZFV
	C5242	FX612220	C.CE	0.1uF	16V CH	ECUX1C104ZFV
	C6001	FX611600	C.EL	220uF	6.3V	ECEA0JKA221
	C6002	FX612090	C.CE	0.1uF	50V CH	ECUM1H104ZFN
	C6003	FX611720	C.EL	10uF	50V	ECEA1HKA100
	C6004	FX612090	C.CE	0.1uF	50V CH	ECUM1H104ZFN
	C6005	FX611610	C.EL	47uF	6.3V	ECEA0JKA470
	C6007	FX612090	C.CE	0.1uF	50V CH	ECUM1H104ZFN
	C6008	FX612080	C.CE	0.01uF	50V CH	ECUM1H103ZFN
	C6009	FX612080	C.CE	0.01uF	50V CH	ECUM1H103ZFN
	C6010	FX612080	C.CE	0.01uF	50V CH	ECUM1H103ZFN
	C6011	FX612080	C.CE	0.01uF	50V CH	ECUM1H103ZFN
	C6012	FX612090	C.CE	0.1uF	50V CH	ECUM1H104ZFN
	C6013	FX612090	C.CE	0.1uF	50V CH	ECUM1H104ZFN
	C6201	FX611880	C.EL	33uF	6.3V	EEVHB0J330
	C6202	FX612220	C.CE	0.1uF	16V CH	ECUX1C104ZFV
	C6203	FX612220	C.CE	0.1uF	16V CH	ECUX1C104ZFV
	C6204	FX612220	C.CE	0.1uF	16V CH	ECUX1C104ZFV
	C6206	FX612220	C.CE	0.1uF	16V CH	ECUX1C104ZFV
	C6207	FX612220	C.CE	0.1uF	16V CH	ECUX1C104ZFV
	C6208	FX612220	C.CE	0.1uF	16V CH	ECUX1C104ZFV
	C6211	FX612220	C.CE	0.1uF	16V CH	ECUX1C104ZFV
	C6212	FX612220	C.CE	0.1uF	16V CH	ECUX1C104ZFV
	C6251	NX702100	C.EL	100uF	6.3V	EEVHB0J101
*	C6252	AAX16240	C.TNTL.CHP	10uF	10V	VCS1AS106
	C6253	FX612220	C.CE	0.1uF	16V CH	ECUX1C104ZFV
	C6254	FX612220	C.CE	0.1uF	16V CH	ECUX1C104ZFV
	C6255	FX611880	C.EL	33uF	6.3V	EEVHB0J330
	C6256	FX611790	C.EL	330uF	6.3V CH	ECEV0JA331
	C6257	NX702100	C.EL	100uF	6.3V	EEVHB0J101
	C6258	FX612310	C.CE	0.01uF	50V CH	ECUX1H103KBV
	C6301	NX702500	C.CE	10pF	50V CH	ECUX1H101JCV
	C6302	FX612210	C.CE	0.1uF	16V CH	ECUX1C104KBV
	C6303	FX612220	C.CE	0.1uF	16V CH	ECUX1C104ZFV
	C6304	FX612220	C.CE	0.1uF	16V CH	ECUX1C104ZFV
	C6305	FX612220	C.CE	0.1uF	16V CH	ECUX1C104ZFV
	C6501	FX611880	C.EL	33uF	6.3V	EEVHB0J330
	C6502	FX612220	C.CE	0.1uF	16V CH	ECUX1C104ZFV
	C6503	FX612220	C.CE	0.1uF	16V CH	ECUX1C104ZFV
*	C6504	AAX16240	C.TNTL.CHP	10uF	10V	VCS1AS106
	C6505	FX612220	C.CE	0.1uF	16V CH	ECUX1C104ZFV
	C6506	FX612220	C.CE	0.1uF	16V CH	ECUX1C104ZFV
	C6511	FX612220	C.CE	0.1uF	16V CH	ECUX1C104ZFV
	C6512	FX612220	C.CE	0.1uF	16V CH	ECUX1C104ZFV
	C6513	FX612220	C.CE	0.1uF	16V CH	ECUX1C104ZFV

	SCHM REF.	PART NO.	DESCRIPTION			REMARKS
	C6514	NX702530	C.CE	15pF	50V CH	ECUX1H150JCV
	C6515	NX702530	C.CE	15pF	50V CH	ECUX1H150JCV
	C6516	FX612220	C.CE	0.1uF	16V CH	ECUX1C104ZFV
	C6517	FX612220	C.CE	0.1uF	16V CH	ECUX1C104ZFV
	C6551	FX612220	C.CE	0.1uF	16V CH	ECUX1C104ZFV
*	C6553	AAX16250	C.TNTL.CHP	4.7uF	10V	VCS1AS475
	C7001	NX702100	C.EL	100uF	6.3V	EEVHB0J101
	C7002	NX702100	C.EL	100uF	6.3V	EEVHB0J101
	C7006	FX612220	C.CE	0.1uF	16V CH	ECUX1C104ZFV
	C7011	FX612220	C.CE	0.1uF	16V CH	ECUX1C104ZFV
	C7012	FX612220	C.CE	0.1uF	16V CH	ECUX1C104ZFV
	C7013	FX612220	C.CE	0.1uF	16V CH	ECUX1C104ZFV
	C7014	FX612220	C.CE	0.1uF	16V CH	ECUX1C104ZFV
	C7015	FX612220	C.CE	0.1uF	16V CH	ECUX1C104ZFV
	C7016	FX612220	C.CE	0.1uF	16V CH	ECUX1C104ZFV
	C7017	FX612220	C.CE	0.1uF	16V CH	ECUX1C104ZFV
	C7018	FX612220	C.CE	0.1uF	16V CH	ECUX1C104ZFV
	C7019	FX612220	C.CE	0.1uF	16V CH	ECUX1C104ZFV
	C7020	FX612220	C.CE	0.1uF	16V CH	ECUX1C104ZFV
	C7021	FX612220	C.CE	0.1uF	16V CH	ECUX1C104ZFV
	C7022	FX612220	C.CE	0.1uF	16V CH	ECUX1C104ZFV
	C7023	FX612220	C.CE	0.1uF	16V CH	ECUX1C104ZFV
	C7024	FX612220	C.CE	0.1uF	16V CH	ECUX1C104ZFV
	C7025	FX612220	C.CE	0.1uF	16V CH	ECUX1C104ZFV
	C7026	FX612220	C.CE	0.1uF	16V CH	ECUX1C104ZFV
	D1001	NX703870	MODUL.RF	ENC471D5ATUB(UAR)		ENC471D5ATUB
⚠	D1002	NX703860	SURG.PRTCT	ENC221D5ATRB		ENC221D5ATRB
⚠	D1011	AAX04220	DIODE	S1WBA80		S1WBA80
	D1031	NX704060	DIODE	VSD0002(UAR)		VSD0002
	D1031	iX637340	DIODE	AP01C(GB)		AP01C
	D1041	iX636960	DIODE	AU01Z		AU01Z
	D1051	iX634180	DIODE	1SS254		1SS254
	D1052	iX634180	DIODE	1SS254		1SS254
*	D1053	AAX16010	DIODE	MA4036M		MA4036M
*	D1111	AAX15440	DIODE	21DQ04		21DQ04
*	D1121	AAX15440	DIODE	21DQ04		21DQ04
	D1126	NX702620	DIODE	11ES1		11ES1
	D1131	iX634150	DIODE.SHOT	11EQS06		11EQS06
	D1132	NX704030	DIODE	MA7150B		MA7150B
	D1141	iX634150	DIODE.SHOT	11EQS06		11EQS06
	D1151	iX634150	DIODE.SHOT	11EQS06		11EQS06
	D1152	iX634150	DIODE.SHOT	1EQS06		11EQS06
	D1161	iX636960	DIODE	AU01Z		AU01Z
*	D1162	AAX16000	DIODE	MA4030		MA4030
	D1171	iX636950	DIODE	AK04		AK04
	D3091	NX702630	DIODE	MA111		MA111
	D3831	AAX18410	DIODE	MA152ATX(GB)		MA152ATX
	D4596	NX702660	DIODE	MA3047M		MA3047M
	D6013	AAX04970	IC	LN28RCPL(GB)		LN28RCPL
*	D6014	AAX15990	DIODE	LN38GCPL		LN38GCPL
	D6251	NX702630	DIODE	MA111		MA111
	D6301	NX702680	DIODE	MA728		MA728
*	DL6001	AAX16520	DISPLAY.TU	VSL0537		VSL0537

*New Parts

	SCHM REF.	PART NO.	DESCRIPTION		REMARKS
⚠	DZ1001	NX703990	SURG.PRTCT	2.7KV	VSQ1003
⚠	F1001	AAX05900	FUSE	1.6A 250V	VSF0248C16
*	FL6251	AAX16450	CONNECTOR	VLF1491S105	VLF1491S105
*	FL6252	AAX16450	CONNECTOR	VLF1491S105	VLF1491S105
*	FL6254	AAX16450	CONNECTOR	VLF1491S105	VLF1491S105
*	FL6255	AAX16440	CONNECTOR	VLF1491S104	VLF1491S104
*	FP2501	AAX16430	CONNECTOR	17P	VJS4383B017B
	FP5201	AAX03990	CN	21P	VJS3913A021
	FP6001	AAX05430	CN	6P	VJS3537A006G
*	FP6002	AAX16380	CONNECTOR	5P	VJS3537A005G
	FP6401	AAX05450	CN	6P	VJS3537B006G
	FP6401	AAX05450	CN	6P(GB)	VJS3537B006G
*	FP6411	AAX16390	CONNECTOR	5P	VJS3537B005G
	IC1101	AAX03700	IC	uPC1093J	UPC1093J
*	IC1125	AAX16100	IC	PQ07RX11	PQ07RX11
	IC1151	AAX05030	IC	SI3090FLF11	SI3090FLF11
*	IC2001	AAX16050	IC	MN67706EA	MN67706EA
*	IC2501	AAX15460	IC	AN8480NSB	AN8480NSB
	IC2511	AAX03430	IC	BA5983FM	BA5983FM
*	IC2591	AAX15490	IC	BA6956AN	BA6956AN
*	IC3001	AAX16060	IC	MN677532JA	MN677532JA
*	IC3002	AAX16090	IC	PQ018EZ01ZP	PQ018EZ01ZP
	IC3061	AAX03520	IC	MNX7160BT1	MNX7160BT1
	IC3071	AAX03520	IC	MNX7160BT1(GB)	MNX7160BT1
*	IC3081	AAX16130	IC	TC4W66FU	TC4W66FU
	IC3091	NX701770	IC	PQ1R33	PQ1R33
*	IC3511	AAX16020	IC	ML6427	ML6427
	IC3801	AAX18250	IC	MM1443XJ(GB)	MM1443XJ
	IC3851	AAX04980	IC	MC14053BF(GB)	MC14053BF
	IC3853	NX703690	IC	BA7660FS(GB)	BA7660FS
	IC3891	AAX18270	IC	PQ12DZ51(GB)	PQ12DZ51
*	IC4201	AAX16080	IC	PCM1746E	PCM1746E
	IC4321	iX636760	IC	NJM4580M	NJM4580M
*	IC4471	AAX16070	IC	NJM4558M	NJM4558M
*	IC4781	AAX15980	IC	GP1FA550TZ	GP1FA550TZ
*	IC4902	AAX16170	IC	UPC78L08J	UPC78L08J
*	IC4911	AAX16180	IC	UPC79L08J	UPC79L08J
*	IC5201	AAX15470	IC	AN8707FH	AN8707FH
	IC6001	AAX18260	IC	MN101C35DCC(GB)	MN101C35DCC
*	IC6001	AAX16030	IC	MN101C35DCA(UAR)	MN101C35DCA
*	IC6002	AAX16120	IC	PST9327UR	PST9327UR
	IC6003	AAX05950	PHOT.SNS	PNA4611M02VT	PNA4611M02VT
*	IC6004	AAX16140	IC	TC7ST08F	TC7ST08F
*	IC6005	AAX16140	IC	TC7ST08F	TC7ST08F
*	IC6201	AAX16040	IC	MN102H55GFB	MN102H55GFB
	IC6251	NX701770	IC	PQ1R33	PQ1R33
	IC6301	AAX03570	IC	PST596JNR	PST596JNR
*	IC6302	AAX16530	IC	VUB8011C430(UAR)	VUB8011C430
	IC6302	AAX18280	IC	VUB8011C492(GB)	VUB8011C492
*	IC6303	AAX15480	IC	AT25020NSI27	AT25020NSI27
*	IC6501	AAX15500	IC	BU2285FV	BU2285FV
*	IC6551	AAX16150	IC	TK71533SCL	TK71533SCL
*	IC7001	AAX16670	IC	MN103S13BGA	MN103S13BGA

	SCHM REF.	PART NO.	DESCRIPTION		REMARKS
*	J3871	AAX05470	CN	21P(GB)	VJS3921
*	JK3531	AAX16310	CONNECTOR		VJJ0544
*	JK3532	AAX16320	JACK.PIN	3P(UAR)	VJJ0598
*	JK4501	AAX16330	JACK.RCA	4P	VJJ0690
	K2002	HX609880	R.MTL.CHP	0Ω 1/16W	ERJ3GEY0R00
	K3001	HX609880	R.MTL.CHP	0Ω 1/16W	ERJ3GEY0R00
	K3002	HX610350	R.MTL.CHP	0Ω 1/10W	ERJ6GEY0R00
	K3003	HX610350	R.MTL.CHP	0Ω 1/10W	ERJ6GEY0R00
	K3013	HX609880	R.MTL.CHP	0Ω 1/16W	ERJ3GEY0R00
	K3014	HX609880	R.MTL.CHP	0Ω 1/16W	ERJ3GEY0R00
	K3021	HX609880	R.MTL.CHP	0Ω 1/16W	ERJ3GEY0R00
	K3511	HX610350	R.MTL.CHP	0Ω 1/10W	ERJ6GEY0R00
	K3552	HX610350	R.MTL.CHP	0Ω 1/10W	ERJ6GEY0R00
	K3851	HX610350	R.MTL.CHP	0Ω 1/10W(GB)	ERJ6GEY0R00
	K3852	HX610350	R.MTL.CHP	0Ω 1/10W(GB)	ERJ6GEY0R00
	K3853	HX610350	R.MTL.CHP	0Ω 1/10W(GB)	ERJ6GEY0R00
	K4752	HX610350	R.MTL.CHP	0Ω 1/10W	ERJ6GEY0R00
	K4771	FX612090	C.CE	0.1uF 50V CH	ECUM1H104ZFN
	K5231	HX609880	R.MTL.CHP	0Ω 1/16W	ERJ3GEY0R00
	K5241	HX609880	R.MTL.CHP	0Ω 1/16W	ERJ3GEY0R00
	K6004	HX610350	R.MTL.CHP	0Ω 1/10W	ERJ6GEY0R00
	K6007	HX610350	R.MTL.CHP	0Ω 1/10W	ERJ6GEY0R00
	K6009	HX610350	R.MTL.CHP	0Ω 1/10W	ERJ6GEY0R00
	K6015	AAX03820	R.CHP	0Ω 1/10W(GB)	ERJ6GMZ0R00
	K6251	HX609860	R.MTL.CHP	0Ω 1/4W	ERJ14Y0R00
	K6301	HX609880	R.MTL.CHP	0Ω 1/16W	ERJ3GEY0R00
	K6502	HX609880	R.MTL.CHP	0Ω 1/16W	ERJ3GEY0R00
	K6503	HX609880	R.MTL.CHP	0Ω 1/16W	ERJ3GEY0R00
	K6504	HX609880	R.MTL.CHP	0Ω 1/16W	ERJ3GEY0R00
	K6521	HX609880	R.MTL.CHP	0Ω 1/16W	ERJ3GEY0R00
	K6531	HX609880	R.MTL.CHP	0Ω 1/16W	ERJ3GEY0R00
⚠	L1001	NX703060	FLTR	ELF15N005A	ELF15N005A
	L1111	AAX05340	COIL	10uH	VLQ0611K100
	L1115	GX609370	COIL	10uH	ELELN100KA
	L1131	NX702210	COIL	33uH	VLQEL05S330K
	L1141	NX702210	COIL	33uH	VLQEL05S330K
	L1151	AAX05350	COIL	22uH	VLQ0611K220
*	L2001	AAX16490	COIL	10uH	VLQ0860K100
*	L2002	AAX16510	COIL	10uH	VLQ0910K100
*	L2003	AAX16510	COIL	10uH	VLQ0910K100
	L2501	HX609860	R.MTL.CHP	0Ω 1/4W	ERJ14Y0R00
*	L3091	AAX16490	COIL	10uH	VLQ0860K100
*	L3501	AAX15630	COIL	22uH	ELESE220JA
	L3851	AAX18350	COIL	ELESN220JA(GB)	ELESN220JA
	L3871	AAX18360	COIL	RLQZN471KLD(GB)	RLQZN471KLD
	L3872	AAX18360	COIL	RLQZN471KLD(GB)	RLQZN471KLD
*	L4201	AAX16500	COIL	22uH	VLQ0909J220
*	L4781	AAX15630	COIL	22uH	ELESE220JA
*	L5201	AAX16490	COIL	10uH	VLQ0860K100
*	L5202	AAX16510	COIL	10uH	VLQ0910K100
	L6001	AAX05360	COIL	100uH	VLQEL05S101J
	L6002	AAX05370	COIL	220uH	VLQEL05S221J
	L6201	NX702750	COIL.CHP	VLP0323A601T	VLP0323A601T

*New Parts

	SCHM REF.	PART NO.	DESCRIPTION		REMARKS
*	L6501	AAX16500	COIL	22uH	VLQ0909J220
*	L6502	AAX16500	COIL	22uH	VLQ0909J220
*	L7001	AAX16510	COIL	10uH	VLQ0910K100
*	L7002	AAX16510	COIL	10uH	VLQ0910K100
*	LA2501	AAX16480	COIL.CHP		VLP0412A601
*	LA2502	AAX16480	COIL.CHP		VLP0412A601
	LB1021	NX702140	COIL	VLP0056	VLP0056
	LB2509	GX609400	COIL		JALBK2HS470T
	LB2510	GX609400	COIL		JALBK2HS470T
	LB2511	GX609400	COIL		JALBK2HS470T
	LB2512	NX702750	COIL.CHP	VLP0323A601T	VLP0323A601T
	LB2513	GX609400	COIL		JALBK2HS470T
	LB2514	GX609400	COIL		JALBK2HS470T
	LB2515	GX609400	COIL		JALBK2HS470T
	LB2516	GX609400	COIL		JALBK2HS470T
	LB3201	NX702750	COIL.CHP	VLP0323A601T	VLP0323A601T
	LB3202	NX702750	COIL.CHP	VLP0323A601T	VLP0323A601T
	LB3203	NX702750	COIL.CHP	VLP0323A601T(UAR)	VLP0323A601T
	LB3204	NX702750	COIL.CHP	VLP0323A601T(UAR)	VLP0323A601T
	LB3533	NX702150	COIL	VLP0145	VLP0145
	LB3534	NX702150	COIL	VLP0145	VLP0145
	LB3536	NX702150	COIL	VLP0145	VLP0145
	LB3537	NX702150	COIL	VLP0145(UAR)	VLP0145
	LB3538	NX702150	COIL	VLP0145(UAR)	VLP0145
	LB3539	NX702150	COIL	VLP0145(UAR)	VLP0145
	LB3871	NX702150	COIL	VLP0145(GB)	VLP0145
	LB3872	NX702150	COIL	VLP0145(GB)	VLP0145
	LB3873	NX702150	COIL	VLP0145(GB)	VLP0145
	LB3874	NX702150	COIL	VLP0145(GB)	VLP0145
	LB4001	NX702750	COIL.CHP	VLP0323A601T	VLP0323A601T
	LB4002	NX702750	COIL.CHP	VLP0323A601T	VLP0323A601T
	LB4003	NX702750	COIL.CHP	VLP0323A601T	VLP0323A601T
	LB4004	NX702750	COIL.CHP	VLP0323A601T	VLP0323A601T
	LB4005	NX702750	COIL.CHP	VLP0323A601T	VLP0323A601T
	LB4006	NX702750	COIL.CHP	VLP0323A601T	VLP0323A601T
	LB4007	HX609980	R.MTL.CHP	10Ω 1/16W	ERJ3GEYJ100
	LB4008	HX609980	R.MTL.CHP	10Ω 1/16W	ERJ3GEYJ100
	LB4501	NX702150	COIL	VLP0145	VLP0145
	LB4511	NX702150	COIL	VLP0145	VLP0145
	LB4531	NX702150	COIL	VLP0145	VLP0145
	LB5201	NX702750	COIL.CHP	VLP0323A601T	VLP0323A601T
	LB5202	NX702750	COIL.CHP	VLP0323A601T	VLP0323A601T
	LB5203	NX702750	COIL.CHP	VLP0323A601T	VLP0323A601T
	LB5204	NX702750	COIL.CHP	VLP0323A601T	VLP0323A601T
	LB5205	NX702750	COIL.CHP	VLP0323A601T	VLP0323A601T
	LB5206	NX702750	COIL.CHP	VLP0323A601T	VLP0323A601T
	LB5207	NX702750	COIL.CHP	VLP0323A601T	VLP0323A601T
	LB5208	NX702750	COIL.CHP	VLP0323A601T	VLP0323A601T
	LB5209	NX702750	COIL.CHP	VLP0323A601T	VLP0323A601T
	LB5210	NX702750	COIL.CHP	VLP0323A601T	VLP0323A601T
	LB5211	GX609400	COIL		JALBK2HS470T
	LB5212	NX702750	COIL.CHP	VLP0323A601T	VLP0323A601T
	LB5213	NX702750	COIL.CHP	VLP0323A601T	VLP0323A601T

	SCHM REF.	PART NO.	DESCRIPTION		REMARKS
	LB5214	NX702750	COIL.CHP	VLP0323A601T	VLP0323A601T
*	LB5215	AAX16460	COIL		VLP0174
*	LB5216	AAX16460	COIL		VLP0174
*	LB5217	AAX16460	COIL		VLP0174
*	LB5218	AAX16460	COIL		VLP017
	LB6003	AAX03840	COIL		VLP0153
	LB6004	AAX03840	COIL		VLP0153
	LB6005	AAX03840	COIL		VLP0153
	LB6010	AAX03840	COIL		VLP0153
	LB6201	GX609450	COIL		VLP0155
	LB6501	NX702750	COIL.CHP	VLP0323A601T	VLP0323A601T
	LB6502	GX609450	COIL		VLP0155
	LB6503	GX609450	COIL		VLP0155
	LB6504	NX702750	COIL.CHP	VLP0323A601T	VLP0323A601T
	LB6505	GX609450	COIL		VLP0155
	LB6506	NX702750	COIL.CHP	VLP0323A601T	VLP0323A601T
	LB6507	GX609450	COIL		VLP0155
	LB6551	NX702750	COIL.CHP	VLP0323A601T	VLP0323A601T
*	LR1041	AAX16470	COIL		VLP0392
⚠	P1001	LX610440	INLET.AC		VJS2986
*	PP1101	AAX16350	CONNECTOR	18P	VJP4368A018B
*	PP2591	AAX16340	CONNECTOR	5P	VJP4366A005B
*	PP3201	AAX16370	CONNECTOR	22P MALE(UAR)	VJP4370A022B
	PP3201	AAX16360	CONNECTOR	14P MALE(GB)	VJP4369A014B
	PP3801	AAX18370	CONNECTOR	16P MALE(G,B)	VJP3042A016W
*	PP4201	AAX16360	CONNECTOR	14P	VJP4369A014B
⚠	PR1161	AAX04040	CN		VSF0015A025
⚠	PR1171	KX604710	FUSE		VSF0015A10
	PS1101	AAX04010	CN		VJS4223A018
*	PS2591	AAX16420	CONNECTOR	5P	VJS4366A005B
*	PS3201	AAX16410	CONNECTOR	22P FEMALE(UAR)	VJS4222C022B
	PS3201	AAX16400	CONNECTOR	14P FEMALE(GB)	VJS4222A014B
	PS3801	AAX18380	CONNECTOR	16P FEMALE(GB)	VJS3042F016W
*	PS4201	AAX16400	CONNECTOR	14P	VJS4222A014B
	PS6201	AAX03930	CN	10P	VJS2961A010
⚠	Q1021	NX704080	TR	2SC4662LF654	2SC4662LF654
⚠	Q1051	iX637290	TR	PS2501-1H	PS25011H
	Q1052	NX704090	TR	2SD1996-S	2SD1996S
*	Q1061	AAX15450	TR	2SD1996-R	2SD1996R
	Q1062	NX704070	TR	2SC3311A-S	2SC3311AS
*	Q1063	AAX15450	TR	2SD1996-R	2SD1996R
	Q1115	NX702880	TR	2SJ525	2SJ525
	Q3081	NX702830	TR	2SB1218A-R	2SB1218AR
	Q3082	NX702830	TR	2SB1218A-R(UAR)	2SB1218AR
	Q3083	NX702830	TR	2SB1218A-R(UAR)	2SB1218AR
	Q3084	NX702830	TR	2SB1218A-R	2SB1218AR
	Q3501	iX637270	TR	2SD601A	2SD601A
	Q3831	AAX05830	TR	XN4402(GB)	XN4402
	Q3832	AAX05820	TR	XN4401(GB)	XN4401
	Q4501	iX637240	TR	2SD1328	2SD1328
	Q4502	iX637270	TR	2SD601A(GB)	2SD601A
	Q4511	iX637240	TR	2SD1328	2SD1328
	Q4512	iX637270	TR	2SD601A(GB)	2SD601A

*New Parts

SCHM REF.	PART NO.	DESCRIPTION			REMARKS
Q4521	iX637240	TR	2SD1328		2SD1328
Q4531	iX637240	TR	2SD1328		2SD1328
Q5201	iX637190	TR	2SB1115T(GB)		2SB1115T
Q5201	AAX05780	TR	2SB1115		2SB1115
* Q6009	AAX15450	TR	2SD1996-R		2SD1996R
QR1115	NX702790	TR.DGT	UN4213		UN4213
QR2001	AAX04240	TR.DGT	UN5213		UN5213
QR3521	iX635550	TR.DGT	UN2212(UAR)		UN2212
QR4521	iX637130	TR.DGT	UN2111		UN2111
QR4593	NX702780	TR.DGT	UN2211		UN2211
QR4594	iX637130	TR.DGT	UN2111		UN2111
QR4596	iX637130	TR.DGT	UN2111		UN2111
QR5201	iX637160	TR.DGT	UN5212		UN5212
* QR5231	AAX16160	TR	UN2121		UN2121
QR6009	NX702890	TR	DTA123JK		DTA123JK
QR6011	NX702890	TR	DTA123JK(GB)		DTA123JK
QR6301	iX637160	TR.DGT	UN5212		UN5212
R1031	HV458120	R.CAR.FR	120KΩ	1/4W	ERDS2FJ124
R1032	HV458120	R.CAR.FR	120KΩ	1/4W	ERDS2FJ124
R1041	HV459100	R.CAR.FP	1MΩ	1/4W	ERDS2TJ105
* R1042	AAX15790	R.MTL.FLM	68Ω	2W	ERG2SJ680
* R1051	AAX15780	R.CAR.FP	75Ω	1/4W	ERDS2TJ750
* R1052	AAX15680	R.CAR.FP	10Ω	1/4W	ERDS2TJ100
R1053	HV455330	R.CAR.FP	330Ω	1/4W	ERDS2TJ331
* R1054	AAX15640	R.CAR.FP	680Ω	1/4W	ER0S2CKG6800
R1061	HV457100	R.CAR.FP	10KΩ	1/4W	ERDS2TJ103
* R1062	AAX15770	R.CAR.FP	510KΩ	1/4W	ERDS2TJ514
* R1063	AAX15760	R.CAR.FP	470KΩ	1/4W	ERDS2TJ474
* R1064	AAX15710	R.CAR.FP	15KΩ	1/4W	ERDS2TJ153
* R1065	AAX15730	R.CAR.FP	3.3KΩ	1/4W	ERDS2TJ332
R1066	HV457470	R.CAR.FP	47KΩ	1/4W	ERDS2TJ473
* R1101	AAX15780	R.CAR.FP	75Ω	1/4W	ERDS2TJ750
R1102	AAX07230	R.MTL	1.2KΩ	1/4W	ER0S2CKF1201
R1103	AAX07230	R.MTL	1.2KΩ	1/4W	ER0S2CKF1201
R1104	HV455560	R.CAR.FP	560Ω	1/4W	ERDS2TJ561
R1105	AAX07280	R.MTL	270Ω	1/4W	ERDS2TJ271
* R1106	AAX15740	R.CAR.FP	3.9KΩ	1/4W	ERDS2TJ392
* R1107	AAX15750	R.CAR.FP	4.7KΩ	1/4W	ERDS2TJ472
R1115	HV458100	R.CAR.FP	100KΩ	1/4W	ERDS2TJ104
R1116	HV456100	R.CAR.FP	1KΩ	1/4W	ERDS2TJ102
R1125	HV455100	R.CAR.FP	100Ω	1/4W	ERDS2TJ101
R1126	AAX07230	R.MTL	1.2KΩ	1/4W	ER0S2CKF1201
R1127	AAX07230	R.MTL	1.2KΩ	1/4W	ER0S2CKF1201
R1161	HV458100	R.CAR.FP	100KΩ	1/4W	ERDS2TJ104
R1181	HV455100	R.CAR.FP	100Ω	1/4W	ERDS2TJ101
R2001	HX610190	R.MTL.CHP	47KΩ	1/16W	ERJ3GEYJ473
R2002	HX610190	R.MTL.CHP	47KΩ	1/16W	ERJ3GEYJ473
R2003	HX610190	R.MTL.CHP	47KΩ	1/16W	ERJ3GEYJ473
R2004	HX610190	R.MTL.CHP	47KΩ	1/16W	ERJ3GEYJ473
R2005	HX610190	R.MTL.CHP	47KΩ	1/16W	ERJ3GEYJ473
R2006	HX610190	R.MTL.CHP	47KΩ	1/16W	ERJ3GEYJ473
R2007	HX610190	R.MTL.CHP	47KΩ	1/16W	ERJ3GEYJ473
R2008	HX610120	R.MTL.CHP	22KΩ	1/16W	ERJ3GEYJ223

SCHM REF.	PART NO.	DESCRIPTION			REMARKS
R2009	HX610120	R.MTL.CHP	22KΩ	1/16W	ERJ3GEYJ223
R2010	HX610160	R.MTL.CHP	27KΩ	1/16W	ERJ3GEYJ273
R2011	HX610040	R.MTL.CHP	12KΩ	1/16W	ERJ3GEYJ123
R2012	HX610220	R.MTL.CHP	5.6KΩ	1/16W	ERJ3GEYJ562
R2013	HX610160	R.MTL.CHP	27KΩ	1/16W	ERJ3GEYJ273
R2014	NX703300	R.MTL.CHP	1MΩ	1/16W	ERJ3GEYJ105
* R2017	AAX15810	R.MTL.CHP	15KΩ	1/16W	ERJ3GEYF153
R2018	HX610190	R.MTL.CHP	47KΩ	1/16W	ERJ3GEYJ473
R2020	AAX06360	R.MTL.CHP	12KΩ	1/16W	ERJ3GEYF123
R2021	HX610010	R.MTL.CHP	10KΩ	1/16W	ERJ3GEYJ103
R2022	HX610120	R.MTL.CHP	22KΩ	1/16W	ERJ3GEYJ223
R2023	HX610120	R.MTL.CHP	22KΩ	1/16W	ERJ3GEYJ223
R2024	NX703380	R.MTL.CHP	56KΩ	1/16W	ERJ3GEYJ563
R2025	NX703380	R.MTL.CHP	56KΩ	1/16W	ERJ3GEYJ563
R2026	HX609990	R.MTL.CHP	100Ω	1/16W	ERJ3GEYJ101
R2027	HX609950	R.MTL.CHP	4.7KΩ	1/16W	ERJ3GEYG472
R2028	HX610010	R.MTL.CHP	10KΩ	1/16W	ERJ3GEYJ103
R2029	NX703420	R.MTL.CHP	10KΩ	1/16W	ERJ3RBD103
R2030	HX610010	R.MTL.CHP	10KΩ	1/16W	ERJ3GEYJ103
R2031	HX609880	R.MTL.CHP	0Ω	1/16W	ERJ3GEY0R00
R2032	HX610190	R.MTL.CHP	47KΩ	1/16W	ERJ3GEYJ473
R2033	HX609950	R.MTL.CHP	4.7KΩ	1/16W	ERJ3GEYG472
R2034	HX609950	R.MTL.CHP	4.7KΩ	1/16W	ERJ3GEYG472
R2501	HX610140	R.MTL.CHP	270Ω	1/16W	ERJ3GEYJ271
R2502	HX610140	R.MTL.CHP	270Ω	1/16W	ERJ3GEYJ271
R2503	NX703240	R.MTL.CHP	0.39Ω	1/4W	ERJ14YKR39
R2505	HX610190	R.MTL.CHP	47KΩ	1/16W	ERJ3GEYJ473
* R2511	AAX15880	R.MTL.CHP	20KΩ	1/16W	ERJ3GEYJ203
R2512	HX610160	R.MTL.CHP	27KΩ	1/16W	ERJ3GEYJ273
R2513	NX703340	R.MTL.CHP	33KΩ	1/16W	ERJ3GEYJ333
* R2514	AAX15880	R.MTL.CHP	20KΩ	1/16W	ERJ3GEYJ203
R2515	HX610160	R.MTL.CHP	27KΩ	1/16W	ERJ3GEYJ273
R2516	NX703340	R.MTL.CHP	33KΩ	1/16W	ERJ3GEYJ333
R2517	HX610040	R.MTL.CHP	12KΩ	1/16W	ERJ3GEYJ123
R2518	HX610010	R.MTL.CHP	10KΩ	1/16W	ERJ3GEYJ103
R2519	NX703390	R.MTL.CHP	7.5KΩ	1/16W	ERJ3GEYJ752
R2520	HX610040	R.MTL.CHP	12KΩ	1/16W	ERJ3GEYJ123
R2521	HX610010	R.MTL.CHP	10KΩ	1/16W	ERJ3GEYJ103
R2522	NX703390	R.MTL.CHP	7.5KΩ	1/16W	ERJ3GEYJ752
R2591	XX701550	R.CAR.CHP	47KΩ	1/10W	ERJ6GEYJ473
R2592	XX701550	R.CAR.CHP	47KΩ	1/10W	ERJ6GEYJ473
R2593	AAX06750	R.MTL.CHP	10KΩ	1/10W	ERJ6GEYJ103
R2594	NX703470	R.MTL.CHP	33KΩ	1/10W	ERJ6GEYF333
R3001	HX610090	R.MTL.CHP	22Ω	1/16W	ERJ3GEYJ220
R3002	HX609950	R.MTL.CHP	4.7KΩ	1/16W	ERJ3GEYG472
R3003	HX609990	R.MTL.CHP	100Ω	1/16W	ERJ3GEYJ101
R3004	HX609880	R.MTL.CHP	0Ω	1/16W	ERJ3GEY0R00
R3005	HX610190	R.MTL.CHP	47KΩ	1/16W	ERJ3GEYJ473
R3051	AAX06630	R.MTL.CHP	7.5KΩ	1/16W	ERJ3RBD752
R3052	HX609990	R.MTL.CHP	100Ω	1/16W	ERJ3GEYJ101
R3055	AAX06630	R.MTL.CHP	7.5KΩ	1/16W	ERJ3RBD752
R3057	AAX06540	R.MTL.CHP	18KΩ	1/16W	ERJ3RBD183
* R3058	AAX15890	R.MTL.CHP	4.3KΩ	1/16W	ERJ3RBD432

*New Parts

SCHM REF.	PART NO.	DESCRIPTION			REMARKS
R3059	AAX06630	R.MTL.CHP	7.5KΩ	1/16W	ERJ3RBD752
R3060	AAX06630	R.MTL.CHP	7.5KΩ	1/16W	ERJ3RBD752
R3061	HX609990	R.MTL.CHP	100Ω	1/16W	ERJ3GEYJ101
R3071	HX610010	R.MTL.CHP	10KΩ	1/16W	ERJ3GEYJ103
* R3081	AAX15900	R.MTL.CHP	75Ω	1/16W	ERJ3RED750
R3082	NX703330	R.MTL.FLM	33Ω	1/16W	ERJ3GEYJ330
R3083	HX609890	R.MTL.CHP	1KΩ	1/16W	ERJ3GEYG102
* R3084	AAX15900	R.MTL.CHP	75Ω	1/16W	ERJ3RED750
R3085	NX703330	R.MTL.FLM	33Ω	1/16W(UAR)	ERJ3GEYJ330
R3086	HX609890	R.MTL.CHP	1KΩ	1/16W(UAR)	ERJ3GEYG102
* R3087	AAX15900	R.MTL.CHP	75Ω	1/16W	ERJ3RED750
R3088	NX703330	R.MTL.FLM	33Ω	1/16W(UAR)	ERJ3GEYJ330
R3089	HX609890	R.MTL.CHP	1KΩ	1/16W(UAR)	ERJ3GEYG102
* R3090	AAX15900	R.MTL.CHP	75Ω	1/16W	ERJ3RED750
R3091	NX703330	R.MTL.FLM	33Ω	1/16W	ERJ3GEYJ330
R3092	HX610170	R.MTL.CHP	330Ω	1/16W	ERJ3GEYJ331
R3501	AAX06850	R.MTL.CHP	4.7KΩ	1/10W	ERJ6GEYJ472
* R3502	AAX15910	R.MTL.CHP	1.8KΩ	1/10W	ERJ6GEYG182
R3504	AAX03820	R.CHP	0Ω	1/10W(GB)	ERJ6GMZ0R00
R3506	AAX03820	R.CHP	0Ω	1/10W(GB)	ERJ6GMZ0R00
R3507	XX701450	R.CAR.CHP	1KΩ	1/10W	ERJ6GEYJ102
R3511	AAX06690	R.MTL.CHP	1KΩ	1/10W	ERJ6ENF1001
R3512	AAX06690	R.MTL.CHP	1KΩ	1/10W	ERJ6ENF1001
R3521	HX610500	R.MTL.CHP	2.2KΩ	1/10W(UAR)	ERJ6GEYG222
R3526	AAX06750	R.MTL.CHP	10KΩ	1/10W(UAR)	ERJ6GEYJ103
R3533	HX610340	R.MTL.CHP	75Ω	1/10W	ERJ6ENF75R0
R3534	HX610340	R.MTL.CHP	75Ω	1/10W	ERJ6ENF75R0
R3536	NX703450	R.MTL.CHP	71.5Ω	1/10W	ERJ6ENF71R5
R3537	HX610340	R.MTL.CHP	75Ω	1/10W(UAR)	ERJ6ENF75R0
R3538	HX610340	R.MTL.CHP	75Ω	1/10W(UAR)	ERJ6ENF75R0
R3539	HX610340	R.MTL.CHP	75Ω	1/10W(UAR)	ERJ6ENF75R0
R3801	AAX18450	R.CAR.CHP	150Ω	1/10W(GB)	ERJ6ENF1500
R3802	AAX18450	R.CAR.CHP	150Ω	1/10W(GB)	ERJ6ENF1500
R3803	AAX18450	R.CAR.CHP	150Ω	1/10W(GB)	ERJ6ENF1500
R3804	AAX18450	R.CAR.CHP	150Ω	1/10W(GB)	ERJ6ENF1500
R3805	XX701440	R.CAR.CHP	100Ω	1/10W(GB)	ERJ6GEYJ101
R3806	XX701550	R.CAR.CHP	47KΩ	1/10W(GB)	ERJ6GEYJ473
R3807	XX701440	R.CAR.CHP	100Ω	1/10W(GB)	ERJ6GEYJ101
R3808	XX701550	R.CAR.CHP	47KΩ	1/10W(GB)	ERJ6GEYJ473
R3811	AAX18430	R.CAR.CHP	120Ω	1/10W(G,B	ERJ6ENF1200
R3812	AAX18440	R.CAR.CHP	130Ω	1/10W(GB)	ERJ6ENF1300
R3831	AAX06750	R.MTL.CHP	10KΩ	1/10W(GB)	ERJ6GEYJ103
R3832	AAX06850	R.MTL.CHP	4.7KΩ	1/10W(GB)	ERJ6GEYJ472
R3833	AAX06750	R.MTL.CHP	10KΩ	1/10W(GB)	ERJ6GEYJ103
R3834	AAX06750	R.MTL.CHP	10KΩ	1/10W(GB)	ERJ6GEYJ103
R3835	AAX06850	R.MTL.CHP	4.7KΩ	1/10W(GB)	ERJ6GEYJ472
R3836	AAX06870	R.MTL.CHP	68Ω	1/10W(GB)	ERJ6GEYJ680
R3837	AAX06850	R.MTL.CHP	4.7KΩ	1/10W(GB)	ERJ6GEYJ472
R3838	AAX06850	R.MTL.CHP	4.7KΩ	1/10W(GB)	ERJ6GEYJ472
R3842	NX703570	R.MTL.CHP	470Ω	1/10W(GB)	ERJ6GEYJ471
R3853	AAX06740	R.MTL.CHP	33KΩ	1/10W(GB)	ERJ6GEYG333
R3854	NX703520	R.MTL.CHP	5.6KΩ	1/10W(GB)	ERJ6GEYG562
R3865	AAX06750	R.MTL.CHP	10KΩ	1/10W(GB)	ERJ6GEYJ103

SCHM REF.	PART NO.	DESCRIPTION			REMARKS
R3871	AAX06900	R.MTL.CHP	820Ω	1/10W(GB)	ERJ6GEYJ821
R3872	XX701440	R.CAR.CHP	100Ω	1/10W(GB)	ERJ6GEYJ101
R3873	AAX06900	R.MTL.CHP	820Ω	1/10W(GB)	ERJ6GEYJ821
R3874	XX701440	R.CAR.CHP	100Ω	1/10W(GB)	ERJ6GEYJ101
R3875	HX610340	R.MTL.CHP	75Ω	1/10W(GB)	ERJ6ENF75R0
R3876	HX610340	R.MTL.CHP	75Ω	1/10W(GB)	ERJ6ENF75R0
R3877	HX610340	R.MTL.CHP	75Ω	1/10W(GB)	ERJ6ENF75R0
R3878	HX610340	R.MTL.CHP	75Ω	1/10W(GB)	ERJ6ENF75R0
R3879	HX610340	R.MTL.CHP	75Ω	1/10W(GB)	ERJ6ENF75R0
R3889	HX610340	R.MTL.CHP	75Ω	1/10W(GB)	ERJ6ENF75R0
R4201	HX610170	R.MTL.CHP	330Ω	1/16W	ERJ3GEYJ331
R4202	HX610110	R.MTL.CHP	2.2KΩ	1/16W	ERJ3GEYJ222
R4309	HX610350	R.MTL.CHP	0Ω	1/10W	ERJ6GEY0R00
R4319	HX610350	R.MTL.CHP	0Ω	1/10W	ERJ6GEY0R00
R4321	HX610440	R.MTL.CHP	100KΩ	1/10W	ERJ6GEYG104
* R4322	AAX15660	R.MTL.CHP	3.9KΩ	1/10W	ERA6YED392
* R4323	AAX15650	R.MTL.CHP	10KΩ	1/10W	ERA6YED103
* R4324	AAX15670	R.MTL.CHP	8.2KΩ	1/10W	ERA6YED822
R4327	XX701550	R.CAR.CHP	47KΩ	1/10W	ERJ6GEYJ473
R4329	HX610510	R.MTL.CHP	22KΩ	1/10W	ERJ6GEYG223
R4331	HX610440	R.MTL.CHP	100KΩ	1/10W	ERJ6GEYG104
* R4332	AAX15660	R.MTL.CHP	3.9KΩ	1/10W	ERA6YED392
* R4333	AAX15650	R.MTL.CHP	10KΩ	1/10W	ERA6YED103
* R4334	AAX15670	R.MTL.CHP	8.2KΩ	1/10W	ERA6YED822
R4337	XX701550	R.CAR.CHP	47KΩ	1/10W	ERJ6GEYJ473
R4338	XX701550	R.CAR.CHP	47KΩ	1/10W	ERJ6GEYJ473
R4366	HX610350	R.MTL.CHP	0Ω	1/10W	ERJ6GEY0R00
R4369	HX610350	R.MTL.CHP	0Ω	1/10W	ERJ6GEY0R00
R4458	HX610350	R.MTL.CHP	0Ω	1/10W	ERJ6GEY0R00
R4459	HX610350	R.MTL.CHP	0Ω	1/10W	ERJ6GEY0R00
* R4471	AAX15940	R.MTL.CHP	68KΩ	1/10W	ERJ6GEYG683
* R4472	AAX15940	R.MTL.CHP	68KΩ	1/10W	ERJ6GEYG683
R4473	XX701550	R.CAR.CHP	47KΩ	1/10W	ERJ6GEYJ473
R4475	XX701550	R.CAR.CHP	47KΩ	1/10W	ERJ6GEYJ473
R4476	XX701550	R.CAR.CHP	47KΩ	1/10W	ERJ6GEYJ473
R4477	AAX15920	R.MTL.CHP	56KΩ	1/10W	ERJ6GEYG563
R4478	HX610350	R.MTL.CHP	0Ω	1/10W	ERJ6GEY0R00
R4501	HX610610	R.MTL.CHP	820Ω	1/10W	ERJ6GEYG821
R4502	HX610490	R.MTL.CHP	220Ω	1/10W	ERJ6GEYG221
R4503	HX610610	R.MTL.CHP	820Ω	1/10W	ERJ6GEYG821
R4504	AAX07170	R.MTL.CHP	820Ω	1/10W(GB)	ERJ6GMYJ821
R4505	AAX07170	R.MTL.CHP	820Ω	1/10W(GB)	ERJ6GMYJ821
R4511	HX610610	R.MTL.CHP	820Ω	1/10W	ERJ6GEYG821
R4512	HX610490	R.MTL.CHP	220Ω	1/10W	ERJ6GEYG221
R4513	HX610610	R.MTL.CHP	820Ω	1/10W	ERJ6GEYG821
R4514	AAX07170	R.MTL.CHP	820Ω	1/10W(GB)	ERJ6GMYJ821
R4515	AAX07170	R.MTL.CHP	820Ω	1/10W(GB)	ERJ6GMYJ821
R4524	HX610570	R.MTL.CHP	3.3KΩ	1/10W	ERJ6GEYG332
R4525	HX610350	R.MTL.CHP	0Ω	1/10W	ERJ6GEY0R00
R4531	HX610610	R.MTL.CHP	820Ω	1/10W	ERJ6GEYG821
R4532	HX610490	R.MTL.CHP	220Ω	1/10W	ERJ6GEYG221
R4533	HX610610	R.MTL.CHP	820Ω	1/10W	ERJ6GEYG821
R4590	XX701450	R.CAR.CHP	1KΩ	1/10W	ERJ6GEYJ102

*New Parts

	SCHM REF.	PART NO.	DESCRIPTION			REMARKS
	R4594	AAX07200	R.MTL.CHP	1KΩ	1/8W	ERJ8GEYJ102
	R4596	HX610510	R.MTL.CHP	22KΩ	1/10W	ERJ6GEYG223
	R4598	HX610560	R.MTL.CHP	330Ω	1/10W	ERJ6GEYG331
*	R4599	AAX15930	R.MTL.CHP	680Ω	1/10W	ERJ6GEYG681
	R4600	HX610490	R.MTL.CHP	220Ω	1/10W	ERJ6GEYG221
	R5201	AAX07260	R.MTL	27Ω	1/2W	ERJ12YJ270
	R5202	NX703320	R.MTL.CHP	2.2Ω	1/16W	ERJ3GEYJ2R2
	R5203	HX610120	R.MTL.CHP	22KΩ	1/16W	ERJ3GEYJ223
	R5204	HX610040	R.MTL.CHP	12KΩ	1/16W	ERJ3GEYJ123
	R5206	HX610070	R.MTL.CHP	150KΩ	1/16W	ERJ3GEYJ154
*	R5207	AAX15870	R.MTL.CHP	5.6KΩ	1/16W	ERJ3GEYF562
	R5208	HX609990	R.MTL.CHP	100Ω	1/16W	ERJ3GEYJ101
*	R5209	AAX15830	R.MTL.CHP	30KΩ	1/16W	ERJ3GEYF303
*	R5210	AAX15860	R.MTL.CHP	47KΩ	1/16W	ERJ3GEYF473
*	R5211	AAX15820	R.MTL.CHP	18KΩ	1/16W	ERJ3GEYF183
*	R5212	AAX15870	R.MTL.CHP	5.6KΩ	1/16W	ERJ3GEYF562
	R5213	HX610010	R.MTL.CHP	10KΩ	1/16W	ERJ3GEYJ103
	R5214	NX703300	R.MTL.CHP	1MΩ	1/16W	ERJ3GEYJ105
	R5215	NX703300	R.MTL.CHP	1MΩ	1/16W	ERJ3GEYJ105
	R5216	NX703300	R.MTL.CHP	1MΩ	1/16W	ERJ3GEYJ105
	R5217	HX609880	R.MTL.CHP	0Ω	1/16W	ERJ3GEY0R00
	R6001	AAX07010	R.MTL.CHP	220Ω	1/10W(GB)	ERJ6GMYJ221
	R6002	HX610490	R.MTL.CHP	220Ω	1/10W	ERJ6GEYG221
	R6004	HX610350	R.MTL.CHP	0Ω	1/10W	ERJ6GEY0R00
	R6010	XX701550	R.CAR.CHP	47KΩ	1/10W	ERJ6GEYJ473
	R6011	XX701550	R.CAR.CHP	47KΩ	1/10W	ERJ6GEYJ473
	R6012	XX701550	R.CAR.CHP	47KΩ	1/10W	ERJ6GEYJ473
	R6013	XX701550	R.CAR.CHP	47KΩ	1/10W	ERJ6GEYJ473
	R6014	XX701550	R.CAR.CHP	47KΩ	1/10W	ERJ6GEYJ473
	R6015	XX701550	R.CAR.CHP	47KΩ	1/10W	ERJ6GEYJ473
	R6016	XX701550	R.CAR.CHP	47KΩ	1/10W	ERJ6GEYJ473
	R6017	XX701550	R.CAR.CHP	47KΩ	1/10W	ERJ6GEYJ473
	R6018	XX701550	R.CAR.CHP	47KΩ	1/10W	ERJ6GEYJ473
	R6019	XX701550	R.CAR.CHP	47KΩ	1/10W	ERJ6GEYJ473
	R6020	AAX06750	R.MTL.CHP	10KΩ	1/10W	ERJ6GEYJ103
	R6021	AAX06750	R.MTL.CHP	10KΩ	1/10W	ERJ6GEYJ103
	R6022	AAX06750	R.MTL.CHP	10KΩ	1/10W	ERJ6GEYJ103
	R6031	HX610440	R.MTL.CHP	100KΩ	1/10W	ERJ6GEYG104
	R6032	HX610440	R.MTL.CHP	100KΩ	1/10W	ERJ6GEYG104
	R6033	HX610440	R.MTL.CHP	100KΩ	1/10W	ERJ6GEYG104
	R6034	HX610440	R.MTL.CHP	100KΩ	1/10W	ERJ6GEYG104
	R6035	HX610440	R.MTL.CHP	100KΩ	1/10W	ERJ6GEYG104
	R6036	AAX06750	R.MTL.CHP	10KΩ	1/10W	ERJ6GEYJ103
	R6038	HX610490	R.MTL.CHP	220Ω	1/10W	ERJ6GEYG221
	R6041	HX610610	R.MTL.CHP	820Ω	1/10W	ERJ6GEYG821
	R6044	HX610610	R.MTL.CHP	820Ω	1/10W	ERJ6GEYG821
	R6047	HX610610	R.MTL.CHP	820Ω	1/10W	ERJ6GEYG821
	R6201	HX610010	R.MTL.CHP	10KΩ	1/16W	ERJ3GEYJ103
	R6208	HX610190	R.MTL.CHP	47KΩ	1/16W	ERJ3GEYJ473
*	R6209	AAX15800	R.MTL.CHP	150Ω	1/16W	ERJ3GEYF151
*	R6210	AAX15850	R.MTL.CHP	470Ω	1/16W	ERJ3GEYF471
*	R6211	AAX15840	R.MTL.CHP	390Ω	1/16W	ERJ3GEYF391
	R6212	HX610190	R.MTL.CHP	47KΩ	1/16W	ERJ3GEYJ473

	SCHM REF.	PART NO.	DESCRIPTION			REMARKS
	R6213	HX609890	R.MTL.CHP	1KΩ	1/16W	ERJ3GEYG102
	R6214	HX609890	R.MTL.CHP	1KΩ	1/16W	ERJ3GEYG102
	R6301	HX610010	R.MTL.CHP	10KΩ	1/16W	ERJ3GEYJ103
	R6302	HX609950	R.MTL.CHP	4.7KΩ	1/16W	ERJ3GEYG472
	R6303	HX609950	R.MTL.CHP	4.7KΩ	1/16W	ERJ3GEYG472
	R6401	HV456100	R.CAR.FP	1KΩ	1/4W	ERDS2TJ102
*	R6402	AAX15690	R.CAR.FP	1.2KΩ	1/4W	ERDS2TJ122
	R6403	HV456100	R.CAR.FP	1KΩ	1/4W	ERDS2TJ102
	R6404	HV456100	R.CAR.FP	1KΩ	1/4W	ERDS2TJ102
*	R6405	AAX15700	R.CAR.FP	1.5KΩ	1/4W	ERDS2TJ152
*	R6406	AAX15720	R.CAR.FP	1.8KΩ	1/4W	ERDS2TJ182
	R6502	AAX06550	R.MTL.CHP	220Ω	1/16W	ERJ3RBD221
	R6503	HX610010	R.MTL.CHP	10KΩ	1/16W	ERJ3GEYJ103
	R6504	HX610010	R.MTL.CHP	10KΩ	1/16W	ERJ3GEYJ103
	R7001	HX609890	R.MTL.CHP	1KΩ	1/16W	ERJ3GEYG102
	R7002	HX610190	R.MTL.CHP	47KΩ	1/16W	ERJ3GEYJ473
	RA2001	AAX07220	R.ARRAY	0Ωx4		EXBV8VR000
	RA2501	NX703070	R.ARRAY	EXBV4V103J		EXBV4V103J
	RA3008	NX703070	R.ARRAY	EXBV4V103J		EXBV4V103J
*	RA3009	AAX15970	R.ARRAY	0Ω		EXBV4VR000
*	RA3010	AAX15970	R.ARRAY	0Ω		EXBV4VR000
	RA3011	NX703100	R.ARRAY	EXBV4V473J		EXBV4V473J
*	RA5201	AAX15960	R.ARRAY	100Ω		EXBV4V101J
	RA6201	NX703070	R.ARRAY	EXBV4V103J		EXBV4V103J
	RA6202	NX703100	R.ARRAY	EXBV4V473J		EXBV4V473J
	RA6203	NX703100	R.ARRAY	EXBV4V473J		EXBV4V473J
	RA6204	NX703100	R.ARRAY	EXBV4V473J		EXBV4V473J
	RA6205	NX703110	R.ARRAY	EXBV8V473J		EXBV8V473J
	RA6206	NX703100	R.ARRAY	EXBV4V473J		EXBV4V473J
	RA7001	NX703110	R.ARRAY	EXBV8V473J		EXBV8V473J
	RA7002	NX703110	R.ARRAY	EXBV8V473J		EXBV8V473J
	RA7003	NX703110	R.ARRAY	EXBV8V473J		EXBV8V473J
	S6401	KX604670	SW			EVQ11G07K
	S6402	KX604670	SW			EVQ11G07K
	S6403	KX604670	SW			EVQ11G07K
	S6404	KX604670	SW			EVQ11G07K
	S6405	KX604670	SW			EVQ11G07K
	S6406	KX604670	SW			EVQ11G07K
	S6407	KX604670	SW			EVQ11G07K
	S6408	KX604670	SW			EVQ11G07K
	S6411	KX604670	SW			EVQ11G07K
⚠*	T1021	AAX15950	TRANS	ETS28AV115AC		ETS28AV115AC
	W3221	HX609880	R.MTL.CHP	0Ω	1/16W	ERJ3GEY0R00
	W701	HX610350	R.MTL.CHP	0Ω	1/10W	ERJ6GEY0R00
	W702	HX610350	R.MTL.CHP	0Ω	1/10W	ERJ6GEY0R00
	W703	HX610350	R.MTL.CHP	0Ω	1/10W	ERJ6GEY0R00
	W704	HX610350	R.MTL.CHP	0Ω	1/10W	ERJ6GEY0R00
	W705	HX610350	R.MTL.CHP	0Ω	1/10W	ERJ6GEY0R00
	W706	HX610350	R.MTL.CHP	0Ω	1/10W	ERJ6GEY0R00
	W707	HX610350	R.MTL.CHP	0Ω	1/10W	ERJ6GEY0R00
	W708	HX610350	R.MTL.CHP	0Ω	1/10W	ERJ6GEY0R00
	W709	HX610350	R.MTL.CHP	0Ω	1/10W	ERJ6GEY0R00
	W710	HX610350	R.MTL.CHP	0Ω	1/10W	ERJ6GEY0R00

*New Parts

	SCHM REF.	PART NO.	DESCRIPTION		REMARKS
	W711	HX610350	R.MTL.CHP	0Ω 1/10W	ERJ6GEY0R00
	W713	HX610350	R.MTL.CHP	0Ω 1/10W	ERJ6GEY0R00
	W714	HX610350	R.MTL.CHP	0Ω 1/10W	ERJ6GEY0R00
	W715	HX610350	R.MTL.CHP	0Ω 1/10W	ERJ6GEY0R00
	W716	HX610350	R.MTL.CHP	0Ω 1/10W	ERJ6GEY0R00
	X6001	QX600940	RSNR.CRYS		EF0EC8004A4
	X6501	AAX04680	RSNR		VSX1044
⚠	ZA1001	AX624190	HOLDER.FUS		EYF52BC
⚠	ZA1002	AX624190	HOLDER.FUS		EYF52BC
	ZA1111	NX701970	GND.MTL	VJR0978	VJR0978
	ZA3501	NX701970	GND.MTL	VJR0978	VJR0978
	ZA3871	AAX05100	PLATE.GND	(G,B)	VMC1450
	ZA4201	NX701970	GND.MTL	VJR0978	VJR0978
	ZA4751	NX701970	GND.MTL	VJR0978	VJR0978
	ZA4752	AAX03730			VMC1446
	ZA6001	NX701970	GND.MTL	VJR0978	VJR0978
		AAX03360	HOLDER.FL		VYQ1654
*		AAX15430	CN.FLAT		VWJ06AW130BB
*		AAX15420	CN.FLAT		VWJ05AW170BB
		AAX15420	CN.FLAT	(GB)	VWJ05AW170BB

*New Parts

2. Casing Parts & Mechanism Section
2-1. Casing Parts & Mechanism Section Exploded View

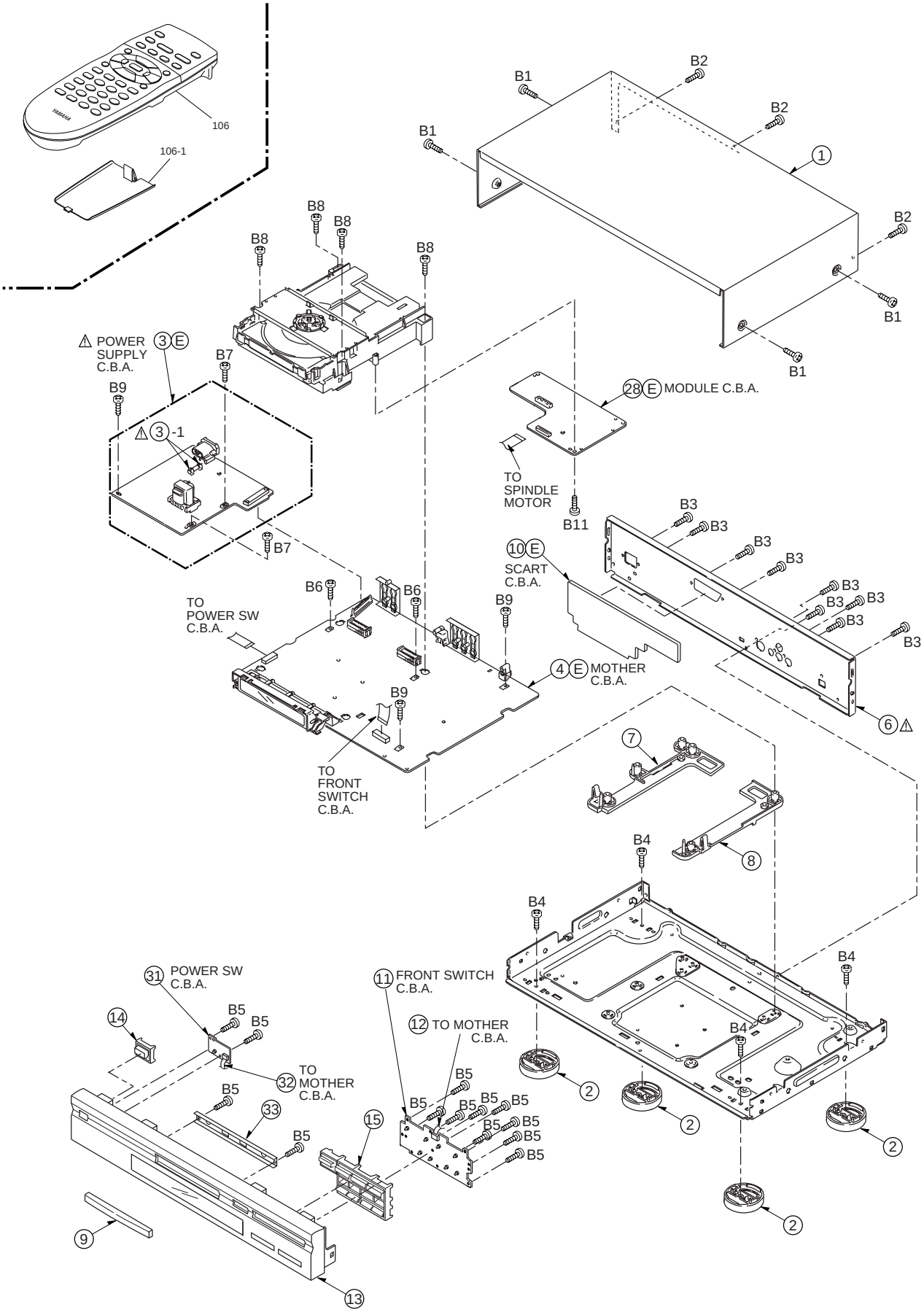

2-2.Casing Parts & Mechanism Section Parts List

	REF. NO.	PART NO.	DESCRIPTION		REMARKS	MARKETS
	1	AAX06210	TOP COVER	BL	VGM1591	
*	1	AAX16800	TOP COVER	GD	VGM1660	
	1	AAX06220	TOP COVER	TI	VGM1592	
	2	CX680310	LEG	BL,TI	VYK7764	
	2	AAX04150	LEG	GD	VYK5504	
⚠*	3	AAX16260	P.C.B. ASS'Y	POWER SUPPLY	VEP91250A	(U)
*	3	AAX18240	P.C.B. ASS'Y	POWER SUPPLY	VEP91252A	(ABG)
*	3	AAX18230	P.C.B. ASS'Y	POWER SUPPLY	VEP91251A	(R)
⚠	3-1	AX624190	FUSE HOLDER		EYF52BC	
*	4	AAX16300	P.C.B. ASS'Y	MOTHER	VEP99144M	(U)
*	4	AAX18150	P.C.B. ASS'Y	MOTHER	VEP99144R	(BG)
*	4	AAX18140	P.C.B. ASS'Y	MOTHER	VEP99144P	(A)
*	4	AAX18130	P.C.B. ASS'Y	MOTHER	VEP99144N	(R)
*	6	AAX15410	REAR PANEL	DVD-S796	VMA0F08	(U)
*	6	AAX18190	REAR PANEL	DVD-S796	VMA0F09	(BG)
*	6	AAX18200	REAR PANEL	DVD-S796	VMA0F10	(A)
*	6	AAX18220	REAR PANEL	DVD-S796	VMA0F48	(R)
*	6	AAX18210	REAR PANEL	DV-S5270	VMA0F46	(U)
*	7	AAX15360	SPACER(L)		VMD3854	
*	8	AAX15370	SPACER(R)		VMD3855	
*	9	AAX15380	TRAY TOP	DVD-S796 BL	VGK2613	
*	9	AAX16770	TRAY TOP	DVD-S796 GD	VGK2580	
*	9	AAX18090	TRAY TOP	DVD-S796 TI	VGK2615	
*	9	AAX18080	TRAY TOP	DV-S5270 BL	VGK2614	
*	10	AAX18390	P.C.B. ASS'Y	SCART	VEP93332B	(GB)
*	11	AAX16280	P.C.B. ASS'Y	FRONT SWITCH	VEP96589A	
*	12	AAX15430	FLAT CARD CABLE		VWJ06AW130BB	
*	13	AAX15400	FRONT PANEL	DVD-S796 BL	VYP7718	
*	13	AAX18120	FRONT PANEL	DVD-S796 GD	VYP7724	
*	13	AAX18110	FRONT PANEL	DVD-S796 TI	VYP7722	
*	13	AAX18100	FRONT PANEL	DV-S5270 BL	VYP7719	
	14	AAX06230	BUTTON, OPERATION	L DVD-S796 BL	VGU8141	
*	14	AAX04720	BUTTON, OPERATION	L DVD-S796 GD	VGU8090	
*	14	AAX06250	BUTTON, OPERATION	L DVD-S796 TI	VGU8143	
*	14	AAX06240	BUTTON, OPERATION	L DV-S5270 BL	VGU8142	
	15	AAX06260	BUTTON, OPERATION	R DVD-S796 BL	VGU8144	
*	15	AAX04730	BUTTON, OPERATION	R DVD-S796 GD	VGU8091	
*	15	AAX06280	BUTTON, OPERATION	R DVD-S796 TI	VGU8146	
*	15	AAX06270	BUTTON, OPERATION	R DV-S5270 BL	VGU8145	
*	28	AAX16270	P.C.B. ASS'Y	MODULE	VEP96572F	(U)
*	28	AAX18160	P.C.B. ASS'Y	MODULE	VEP96572G	(BG)
*	28	AAX18180	P.C.B. ASS'Y	MODULE	VEP96572L	(A)
*	28	AAX18170	P.C.B. ASS'Y	MODULE	VEP96572H	(R)
*	31	AAX16290	P.C.B. ASS'Y	POWER SWITCH	VEP96590A	
*	32	AAX15420	FLAT CARD CABLE		VWJ05AW170BB	
	33	AAX04520	FRONT ANGLE		VMA0A98	
	B1	EX603940	SCREW		VHD1041	
	B2	EX603920	SCREW		VHD0690	
	B3	EX603920	SCREW		VHD0690	
	B4	AAX04390	SCREW		XTV3+8G	
	B5	EX604040	SCREW		XTV3+10G	
	B6	AAX04420	SCREW		XYE3+EF12	
	B7	AAX04430	SCREW		XYE3+EF20	
	B8	AAX04440	SCREW		XYE3+EF25	
*	B9	AAX15390	SCREW		XYE3+EF8	
	B11	EX604040	SCREW		XTV3+10G	
			ACCESSORIES			
*	106	AAX15220	REMOTE CONTROL UNIT		VEQ2404	
*	106-1	AAX15190	LID		TR1122722030	
		AAX06300	POWER CORD		VJA1095	(U)
		AAX06290	POWER CORD		VJA0940	(B)
		MX605250	POWER CORD		VJA0664	(GR)
		NX704290	POWER CORD		VJA0754	(A)
		AAX03350	AV CABLE		VJA1062	

*New Parts

3. Loading Mechanism Section

3-1. Loading Mechanism Section Exploded View

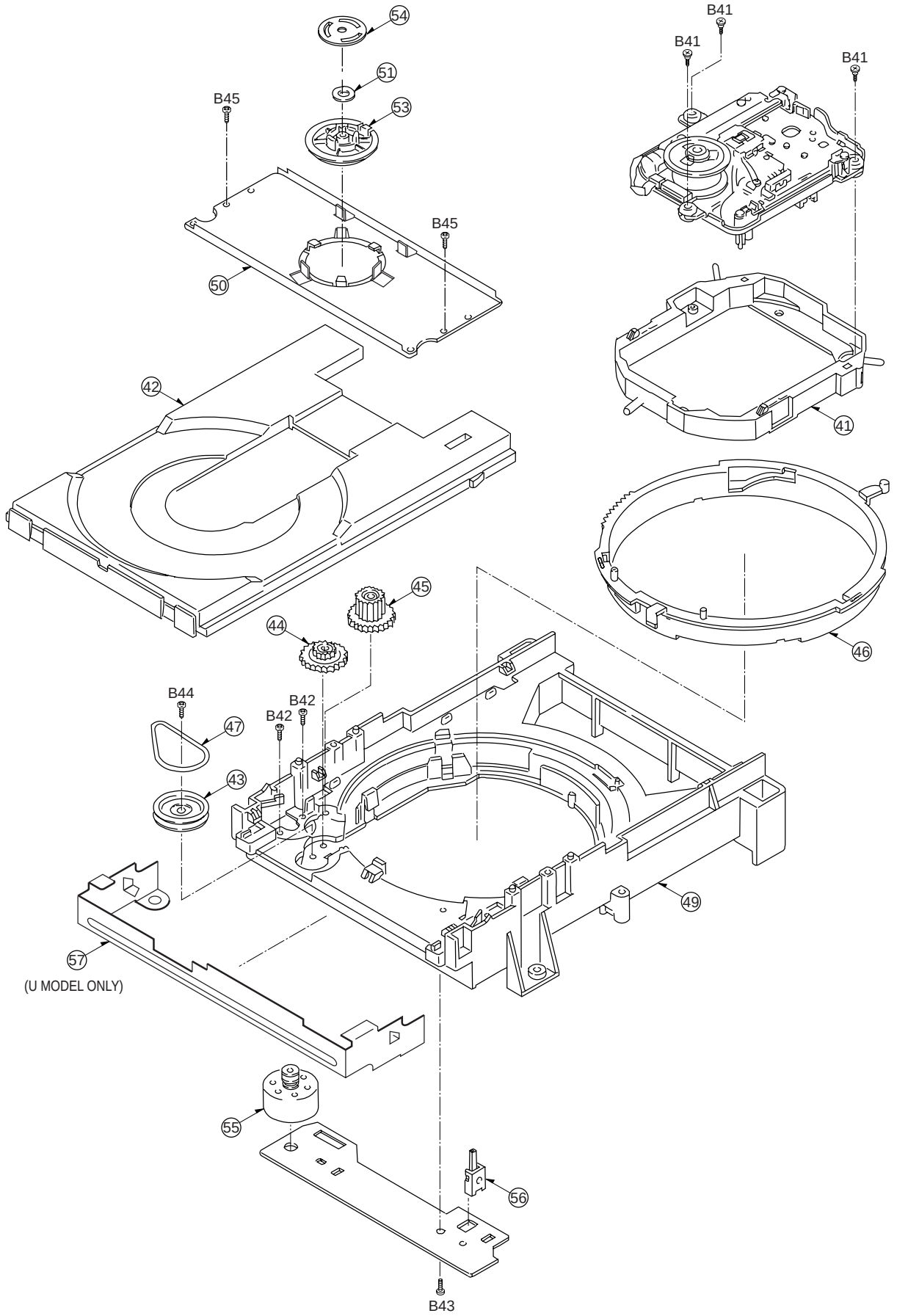

3-2. Loading Mechanism Section Parts List

	REF. NO.	PART NO.	DESCRIPTION	REMARKS	MARKETS
	41	AAX04750	MIDDLE CHASSIS	VMD3270	
	42	AAX04300	TRAY	VMD3265	
	43	AAX04530	PULLEY GEAR	VDG1308	
	44	AAX04640	REDUCTION GEAR	VDG1309	
	45	AAX04630	GEAR, DRIVE	VDG1310	
	46	AAX04660	CAM, UP-DOWN	VDK0156	
	47	CX680240	BELT	VDV0373	
	49	AAX04580	BASE, LOADING	VMD3266	
*	50	AAX15350	CLAMPER BASE	VMA0E55	
	51	XX701070	MAGNET	RHM245ZA	
*	53	AAX15340	CLAMPER	VMD3884	
*	54	AAX15250	CLAMPER WEIGHT	VMA0E54	
	55	AAX01250	MOTOR, LOADING	VEM0664	
	56	AAX03330	SWITCH	VSH0170	
	57	AAX05560	SHIELD PLATE	VMA0C12	(U)
	B41	AAX04340	SCREW	VHD1223	
	B42	EX603980	SCREW	XQNQC17+3	
	B43	EX604040	SCREW	XTV3+10G	
*	B44	AAX15230	SCREW	VHD1330	
	B45	EX604040	SCREW	XTV3+10G	

*New Parts

4. Traverse Section
4-1. Traverse Section Exploded View

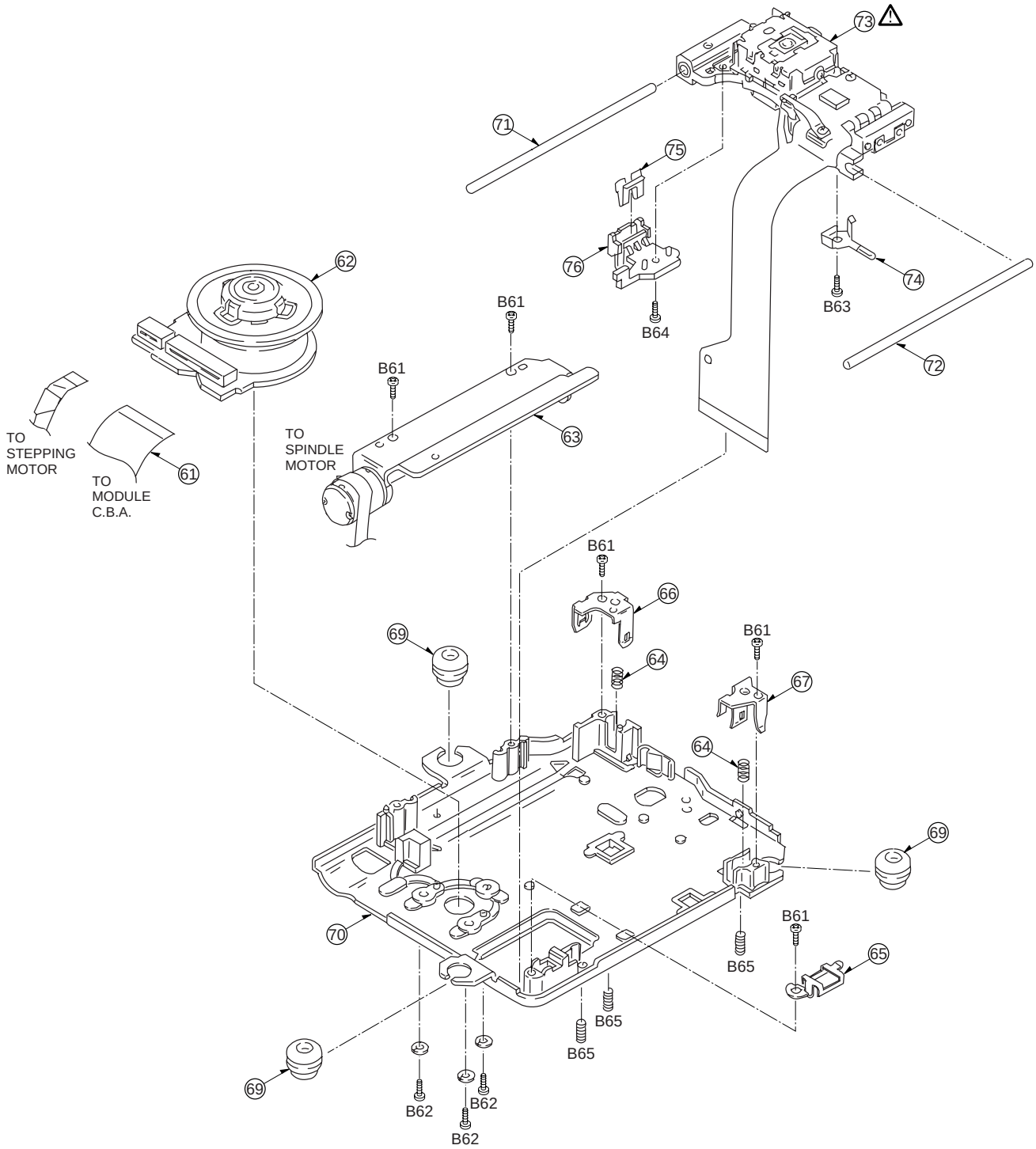

4-2. Traverse Section Parts List

	REF. NO.	PART NO.	DESCRIPTION		REMARKS	MARKETS
*	61	AAX15330	SPINDLE FFC		VWJ1388	
*	62	AAX15170	SPINDLE MOTOR		BML3E4CRU	
*	63	AAX15210	STEPPING MOTOR UNIT		VEM0720	
	64	AAX03740	SPRING		VMB3278	
	65	AAX04770	SPRING		VMC1487	
*	66	AAX15260	SPRING HOLDER 1		VMC1606	
*	67	AAX15270	SPRING HOLDER 2		VMC1607	
	69	AAX04500	FLOATING RUBBER		VMG1166	
*	70	AAX15280	TRAVERSE CHASSIS		VMK0502	
	71	AAX03750	GUIDE SHAFT	1	VMS6471	
	72	AAX03760	GUIDE SHAFT	2	VMS6472	
*	73	AAX15200	OPTICAL PICK-UP		VED04021	
	74	AAX04780	SPRING		VMC1491	
	75	AAX04330	NUT SPRING		VMC1490	
	76	AAX04320	NUT		VMD3260	
	B61	AAX04350	SCREW		VHD1224	
*	B62	AAX15240	SCREW		VHD1358	
	B63	EX603950	SCREW		VHD1057	
	B64	EX603980	SCREW		XQNQC17+3	
	B65	AAX04410	SCREW		XXE26C6FN	

*New Parts

5. Remote Control Transmitter

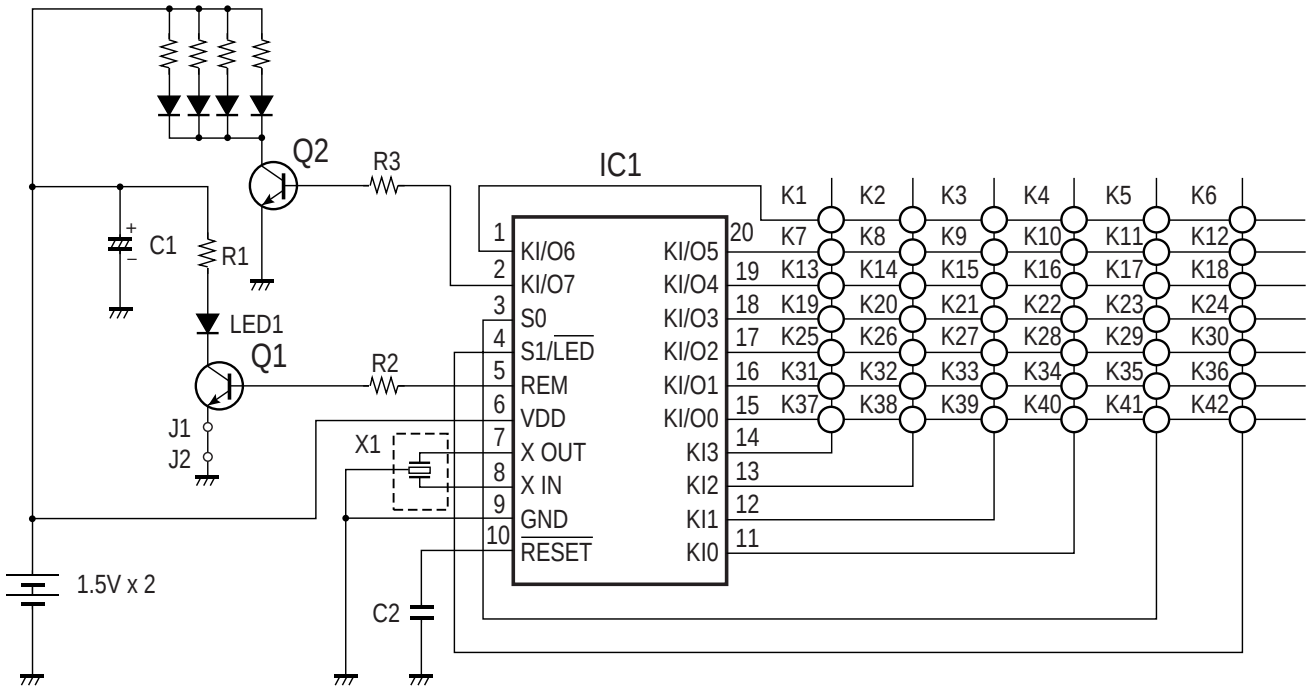

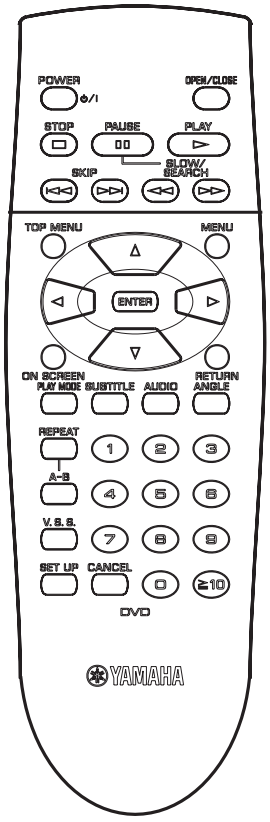

NO.	FUNCTION	NO.	FUNCTION
K1	↑	K22	MENU
K2	←	K23	VSS
K3	→	K24	7
K4	↓	K25	ENTER
K5	Not used	K26	RETURN
K6	Not used	K27	PLAY MODE
K7	ON SCREEN	K28	SUBTITLE
K8	POWER	K29	8
K9	OPEN/CLOSE	K30	9
K10	STOP	K31	AUDIO
K11	Not used	K32	ANGLE
K12	Not ued	K33	REPEAT
K13	PAUSE	K34	1
K14	PLAY	K35	SET UP
K15	SKIP ⏮	K36	CANCEL
K16	SKIP ⏭	K37	2
K17	5	K38	3
K18	6	K39	A-B
K19	SLOW/SEARCH ◀◀	K40	4
K20	SLOW/SEARCH ▶▶	K41	0
K21	TOP MENU	K42	>10