SERVICE MANUAL

RV253

4822 725 50858

marantz®

model RV253

Dolby Surround Processor

MARANTZ DESIGN AND SERVICE

Using superior design and selected high grade components, MARANTZ company has created the ultimate in stereo sound.
Only **original MARANTZ parts** can insure that your MARANTZ product will continue to perform to the specifications for which it is famous.

Parts for your MARANTZ equipment are generally available to our National Marantz Subsidiary or Agent.

MARANTZ INTERNATIONAL
Vestdijk 9
5600 MD Eindhoven
The Netherlands
Phone: +31/40.758290
Telefax: +31/40.75.82.99
Telex: 35000 PHTC NL routing IND NLMTFAT

ORDERING PARTS:

Parts can be ordered either by mail or by telex. In both cases, correct part number has to be specified.
The following information must be supplied to eliminate delays in processing your order:
1. Complete address
2. Complete part numbers and quantities required
3. Description of parts
4. Model number for which part is required
5. Way of shipment
6. Signature: any order form or telex must be signed otherwise such part order will be considered as null and void.

PARTS ORDERING

Parts may be ordered at the following addresses:

AUSTRIA
HORNYPHON
Vertriebsgesellschaft GmbH
Wienerbergstrasse 1
A 1101 Wien
Austria
Telex: 132.332

BELGIUM
SVD DIVISION MARANTZ
Industrialaan 1
1720 Groot-Bijgaarden
Belgium
Telex: 24466

CHILE
MARANTZ
DIVISION OF PHILIPS S.A.
AV. Santa Maria, 0760
Casilla 2687
Santiago
Telex: 240.239

DENMARK
MARANTZ
DIVISION OF PHILIPS
SERVICE A/S
Prags Boulevard 80
Postbox 1919
DK-2300 København S
Denmark
Telex: 31201

FINLAND
MARANTZ
DIVISION OF OY PHILIPS Ab
Kaivokatu 8
00100 Helsinki
Finland
Telex: 124811

FRANCE
MARANTZ FRANCE
4 Rue Bernard Palissy
92600 Asnières
France
Telex: 611651

GERMANY
MARANTZ GERMANY GmbH
Max-Planck-Strasse 22
6072 Dreieich 1
Germany
Telex: 529821

THE NETHERLANDS
Elpro Marantz
Wint Hontlaan 28
3526 KV Utrecht
The Netherlands
Telex: 4748

NORWAY
MARANTZ
DIVISION OF PHILIPS A/S
Sandstuveien 40
0680 Oslo 6
Norway
Telex: 72640

GREAT BRITAIN
MARANTZ AUDIO U.K. Ltd
Unit 15/16
Saxon Way Industrial Estate
Moor Lane
Harmondsworth UB7 OLW
Great Britain
Telex: 935196

GREECE
SHERTON ELECTRONICS S.A.
P.O.Box 21025
Hippocratus Street 188
Athens 11471
Greece
Telex: 216.795

JAPAN
MARANTZ JAPAN, Inc.
35-1, 7-chome, Sagamiono
Sagamihara-shi, Kanagawa
Japan

KUWAIT
AL ALAMIAH ELECTRONICS
Ussama Building
Fahd al Saleem Street
P.O.Box 23781
Safat-Kuwait
Telex: 22694

ITALY
MARANTZ ITALIANA S.P.A.
Via Chiese, 74
20126 Milano
Italy

SAUDI ARABIA
AL ALAMIAH ELECTRONICS
P.O.Box 5954
University Street
Riyadh 11432
Saudi Arabia
Telex: 401530

SOUTH AFRICA
MARANTZ
DIVISION OF PHILIPS S.A.
Main Road Martindale
P.O. Box. 58088
Newville 21114
South Africa

SPAIN
PHONO S.A.
Ignacio Iglesias 10
Badalona (Barcelona)
Spain
Telex: 59355

SWEDEN
MARANTZ
DIVISION OF PHILIPS
Försäljning AB
Tegeluddsvägen 1
S-115 84 Stockholm
Sweden
Telex: 14060

SWITZERLAND
DYNAVOX ELECTRONICS
Route de Villars 105
1701 Fribourg
Switzerland
Telex: 942377

TURKEY
DOGRUOL Ltd.
I.M.C.
6 Blok N°6310
Unkapani
Istanbul
Turkey
Telex: 22085

MALTA
CACHIA & GALEA
Republic Street, 68D
Valetta
Telex: 1682

PORTUGAL
MARANTZ
Divisao philips S.A. service
Outurela-carnaxide
2795 LinDA-A-VELHA
Telex: 43906

All of the above locations are fully equipped to take care of your total service needs. Because various countries have differing configuration requirements, it is necessary that you contact the service facility in your particular country. In the event that there is no service location listed for your country, please, contact the nearest facility for the necessary assistance.

In case of difficulties, do not hesitate to contact the Technical Department at abovementioned address.

TABLE OF CONTENTS

How to use this service manual

- The "Common parts" which Marantz Japan, Inc. has established are eliminated from this service manual.
- These "Common parts" are applied to all models in the service manuals arranged and issued by MJI.
- To indicate clearly the common parts in the schematic diagram, a line is drawn above or under the Ref. Desig. No. of applicable parts.
- "Common parts" can be supplied from the Marantz service center as ever.
  In case of ordering, please establish the parts number of 12 N/C'S following the procedure mentioned in this service manual "How to establish the parts number for common parts".

1) Please correctly write the parts number of 12 N/C'S following the rule.

MODEL RV253 DOLBY SURROUND PROCESSOR

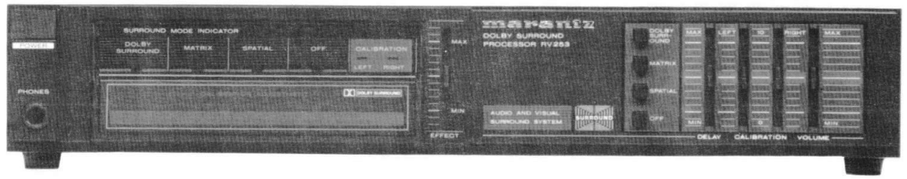

1. P.W. BOARDS

As can be seen from the circuit diagram, the chassis of your Dolby Surround Processor consists of the following units. Each unit mounted on a printed circuit board is described within the square enclosed by a bold dotted line on the circuit diagram.

1. Delay, Matrix ..... mounted on P.W. Board P701
2. Power Supply ..... mounted on P.W. Board P801
3. Slide Volume (EFFECT) .. mounted on P.W. Board PL01
4. LED ..... mounted on P.W. Board PR01
5. Push Switch ..... mounted on P.W. Board PS01
6. Power Switch ..... mounted on P.W. Board PS51
7. Headphone Jack ..... mounted on P.W. Board PT01
8. Speaker Terminal ..... mounted on P.W. Board PW01
9. Slide Volume ..... mounted on P.W. Board PY01

2. TECHNICAL SPECIFICATIONS

Rated Power
- 6 ohms EIAJ ..... 30 W
- DIN 8 ohms 1 kHz ..... 25 W

Total Harmonic Distortion
- 8 Ohms (Direct, 1 kHz 20 W) 0.04%

Input
- Line Sensitivity/Impedance ..... 270 mV/80 k ohms

Frequency Response
- Direct (20 Hz ~ 35 kHz) ..... +0, −3 dB
- Dolby (100 Hz ~ 6 kHz) ..... +0, −3 dB

Signal to Noise Ratio
- Direct (IHF-A) ..... 90 dB
- Dolby (CCIR/ARM, WTD) ..... 70 dB

Output
- Line Level/Impedance ..... 540 mV/1.0 k ohms

Delat Time ..... 15 – 30 msec (Adj.)

Power Requirement
- N and T versions ..... 220/240V AC, 50/60 Hz

Dimensions
- Panel Width ..... 320 mm
- Panel Height ..... 55 mm
- Depth ..... 260 mm

Weight
- Unit alone ..... 3.0 kg

3. MEASUREMENT INSTRUMENTS REQUIRED FOR SERVICING

ITEM	APPLICATIONS
Distortion rate meter	For distortion measurement
Low frequency generator	signal source for sine wave and square wave
AC VTVM	For AC power voltage measurement
Oscilloscope	For waveform analysis, troubleshooting and ASO adjustment
DC VTVM	For DC power voltage measurement
AC wattmeter	For monitoring the primary power consumption of amp
Power voltmeter	For monitoring the primary voltage of amp
Sliduck	For adjusting the primary voltage of amp
Tester	For troubleshooting
Shorting plug	For short-circuiting the amp input so that the noise is not introduced

4. ADJUSTING METHOD

★ BEFORE STARTING ADJUSTMENT

1. Apply the AC primary voltage.
2. Set the volume to its minimum position.
3. Set the L and R calibration controls to their maximum positions.
4. Set the function switch to the DOLBY position.
5. Set the delay time control and effect volume control to their minimum positions.
6. Turn the power switch ON.

4.1 CALIBRATION ADJUSTMENT

1. Connect an AC level meter between pin ① of IC: Q604 on the delay/matrix Po.W. Board (P701) and the ground.
2. Apply 1 kHz input to the L channel only.
3. Adjust RX14 semifixed resistor so that the LED lights.
4. Confirm that the LED lights in a range of 1 V ±0.5 dB when the input level is lowered and raised again to 1 V.
5. Adjust for the R channel in the same way as above.

4.2 DISTORTION ADJUSTMENT

1. Connect a distortion meter between pin ① of IC: Q604 on the delay/matrix P.W. Board (P701) and the ground.
2. Apply 1 kHz input to the L channel only.
3. Raise the input level so that 1.6 V is present at pin ① of Q604.
4. Adjust R605 semifixed resistor so that the distortion becomes minimum in the above condition.

5. IC INTERNAL EQUIVALENT CIRCUITS

Q602 : MN3008

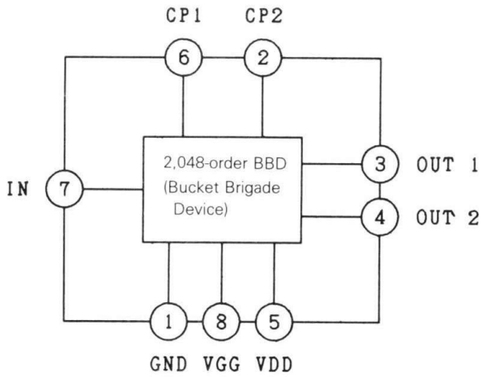

Q701 : STK-4024V

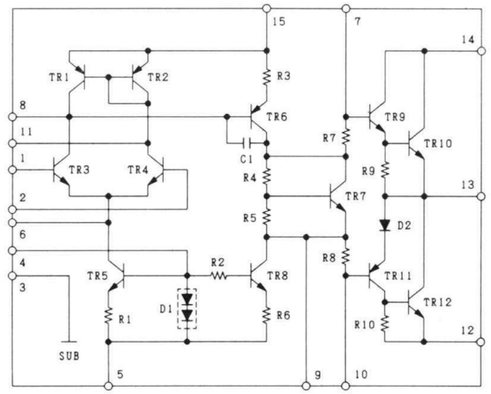

Q603 : MN3101

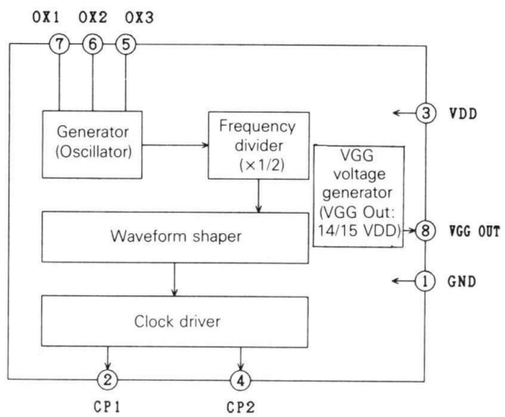

Q801 : NJM78M06A

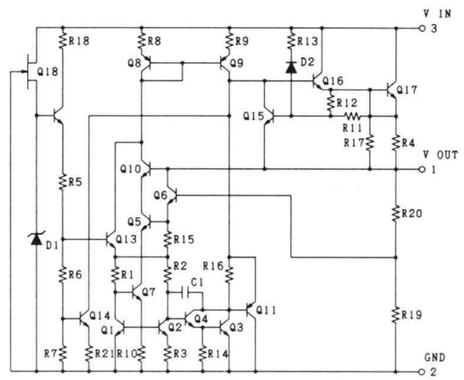

Q605 : TA7629P

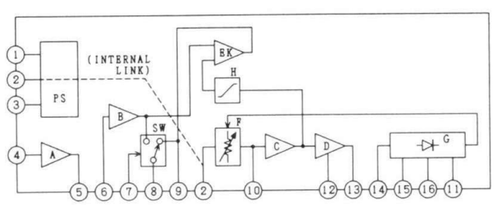

Q802 : NJM79M06A

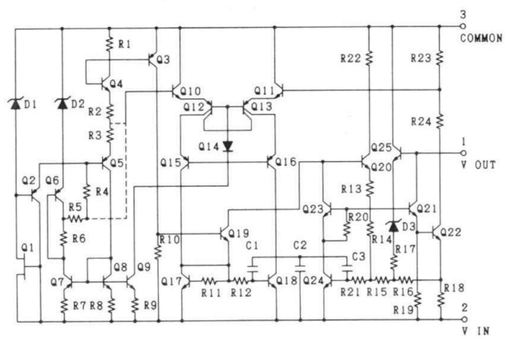

6. BLOCK DIAGRAM

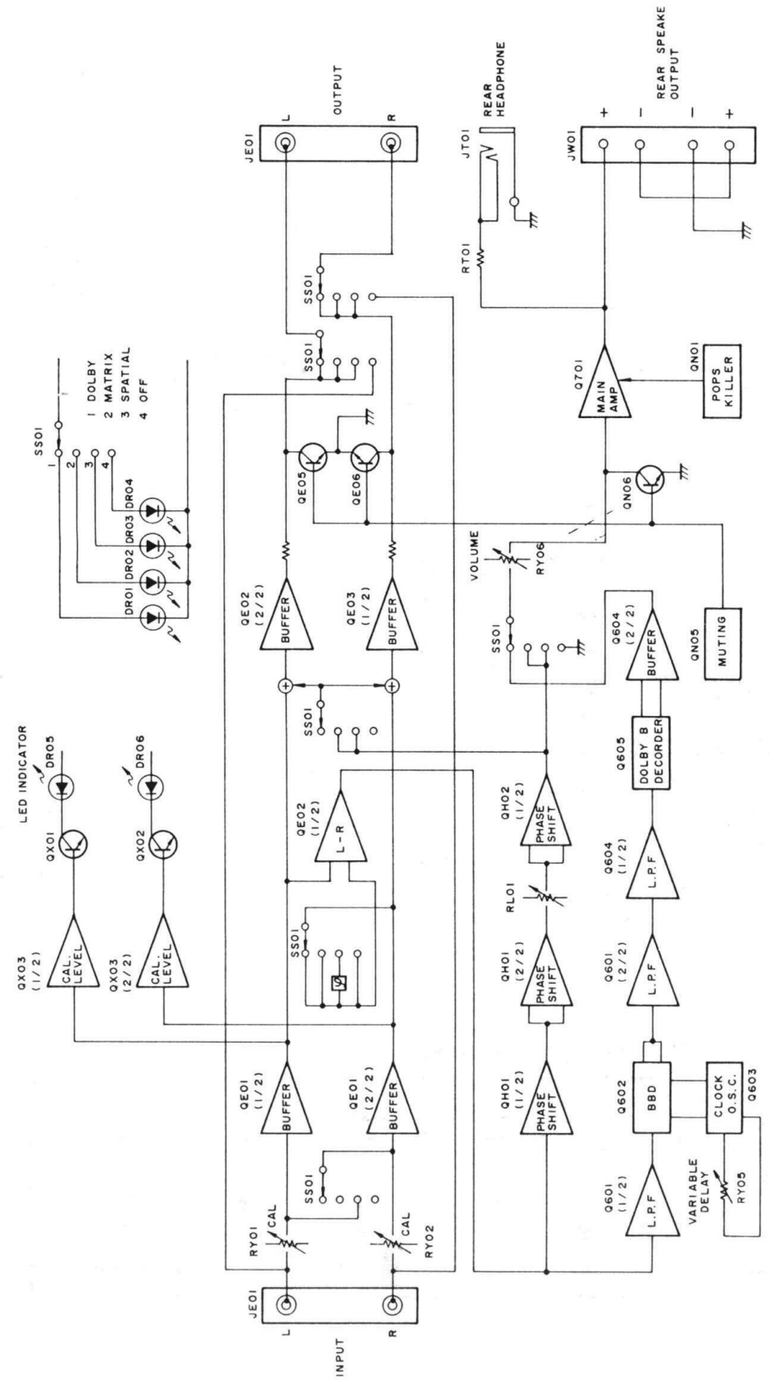

8.4 Delay/Matrix Assembly (P701) Component Locations

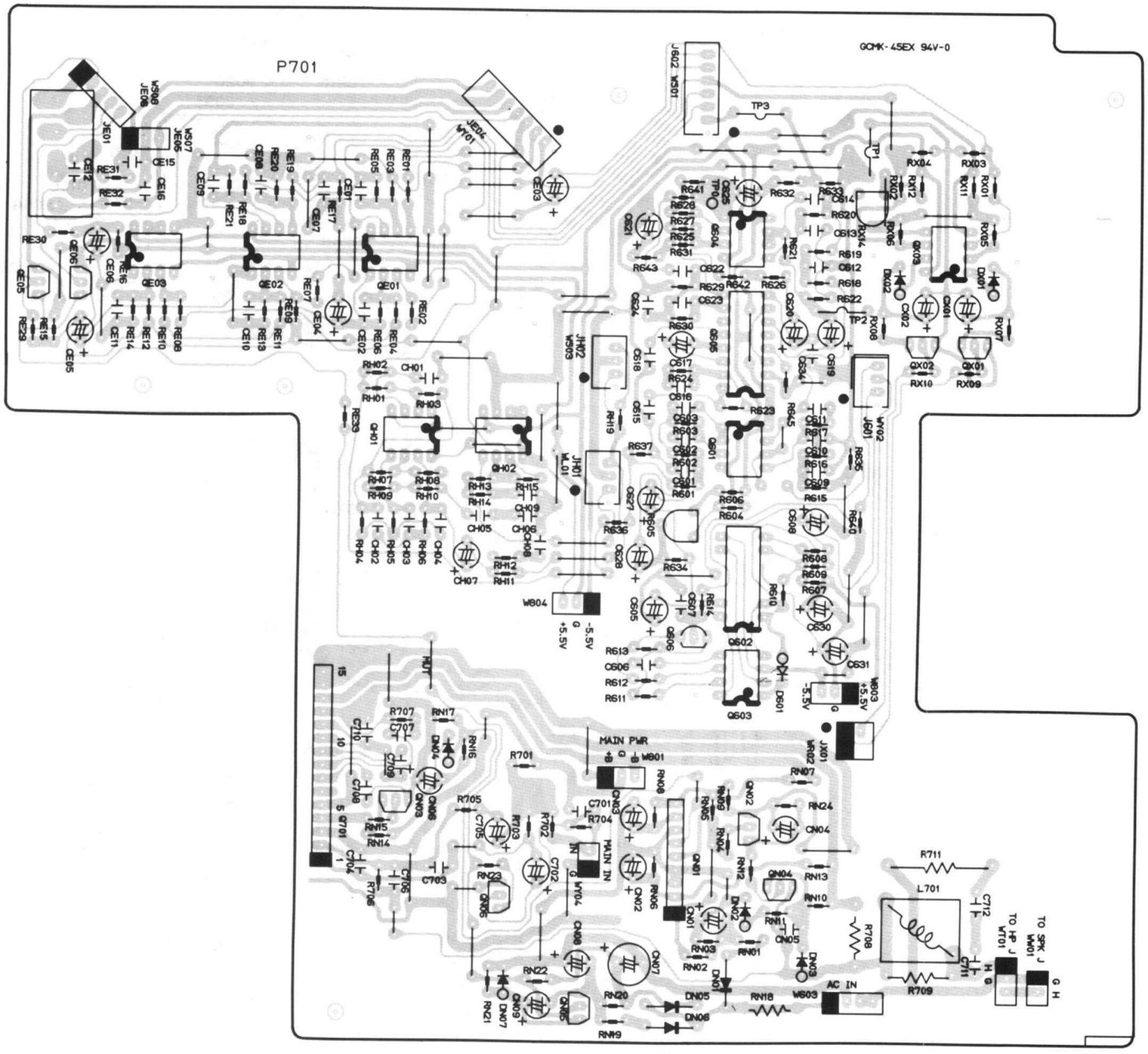

8.5 Power Supply Assembly (P801) Component Locations

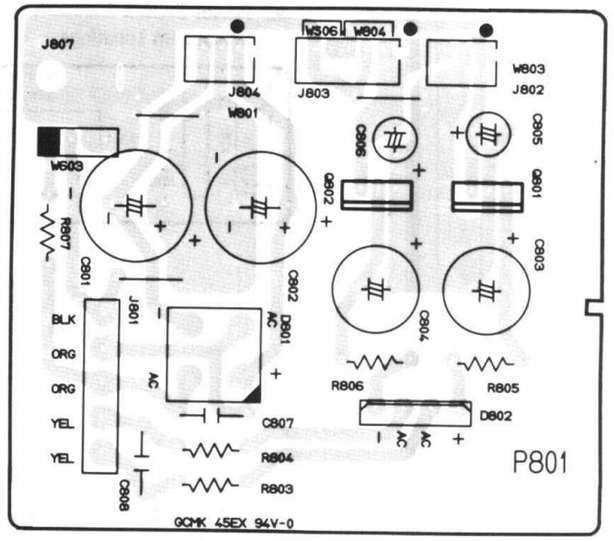

8.6 Push Switch Assembly (PS01) Component Locations

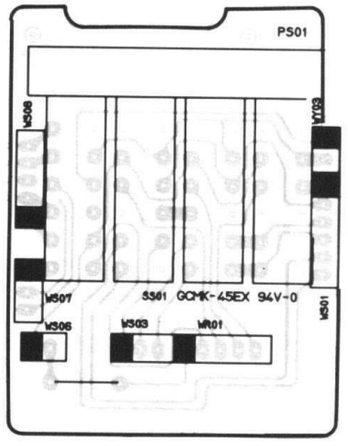

7. VOLTAGE CONVERSION

To convert the unit to a different power source voltage, change the position as illustrated in the drawing below.

VOLTAGE SELECTOR

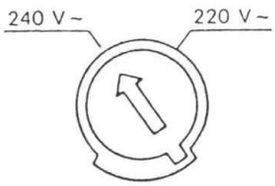

(N, A) Version

CAUTION:
DISCONNECT POWER SUPPLY CORD FROM AC OUTLET BEFORE CONVERTING VOLTAGE. DO NOT DISASSEMBLE THE VOLTAGE SELECTOR ABSOLUTELY.

NOTE ON SAFETY:
SYMBOL ⚠ FIRE OR ELECTRICAL SHOCK HAZARD. ONLY ORIGINAL PARTS SHOULD BE USED TO REPLACE ANY PART MARKED WITH SYMBOL ⚠. ANY OTHER COMPONENT SUBSTITUTION (OTHER THAN ORIGINAL TYPE), MAY INCREASE RISK OF FIRE OR ELECTRICAL SHOCK HAZARD.

8. COMPONENT LOCATIONS (Component Side)

8.1 Speaker Terminal Assembly (PW01) Component Locations

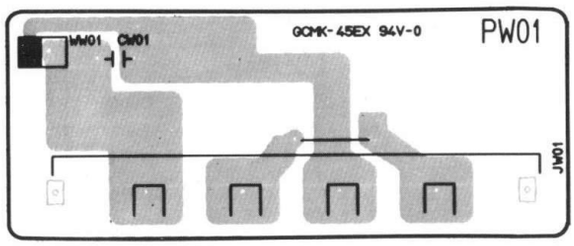

8.2 Headphone Jack Assembly (PT01) Component Locations

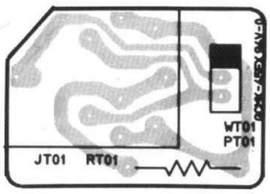

8.3 LED Assembly (PR01) Component Locations

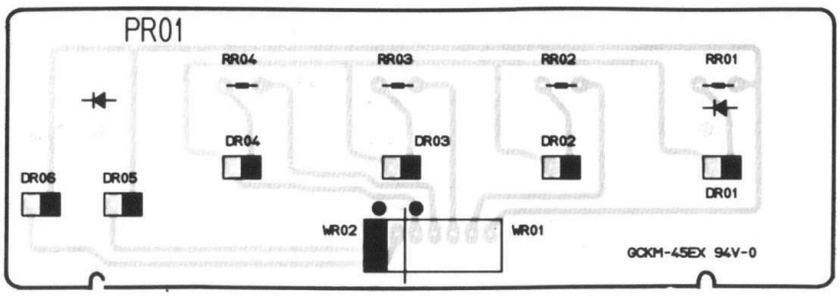

8.7 Power Switch Assembly (PS51) Component Locations

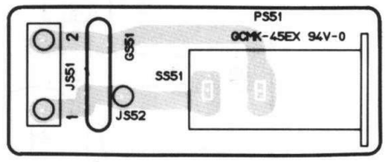

8.8 Slide Volume Assembly (PY01) Component Locations

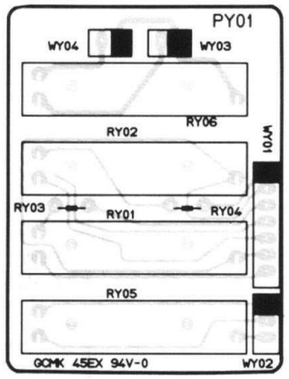

8.9 Slide Volume (EFFECT) Assembly (PL01) Component Locations

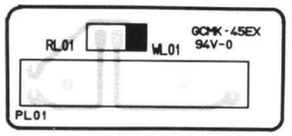

9. EXPLODED VIEWS AND PARTS LIST

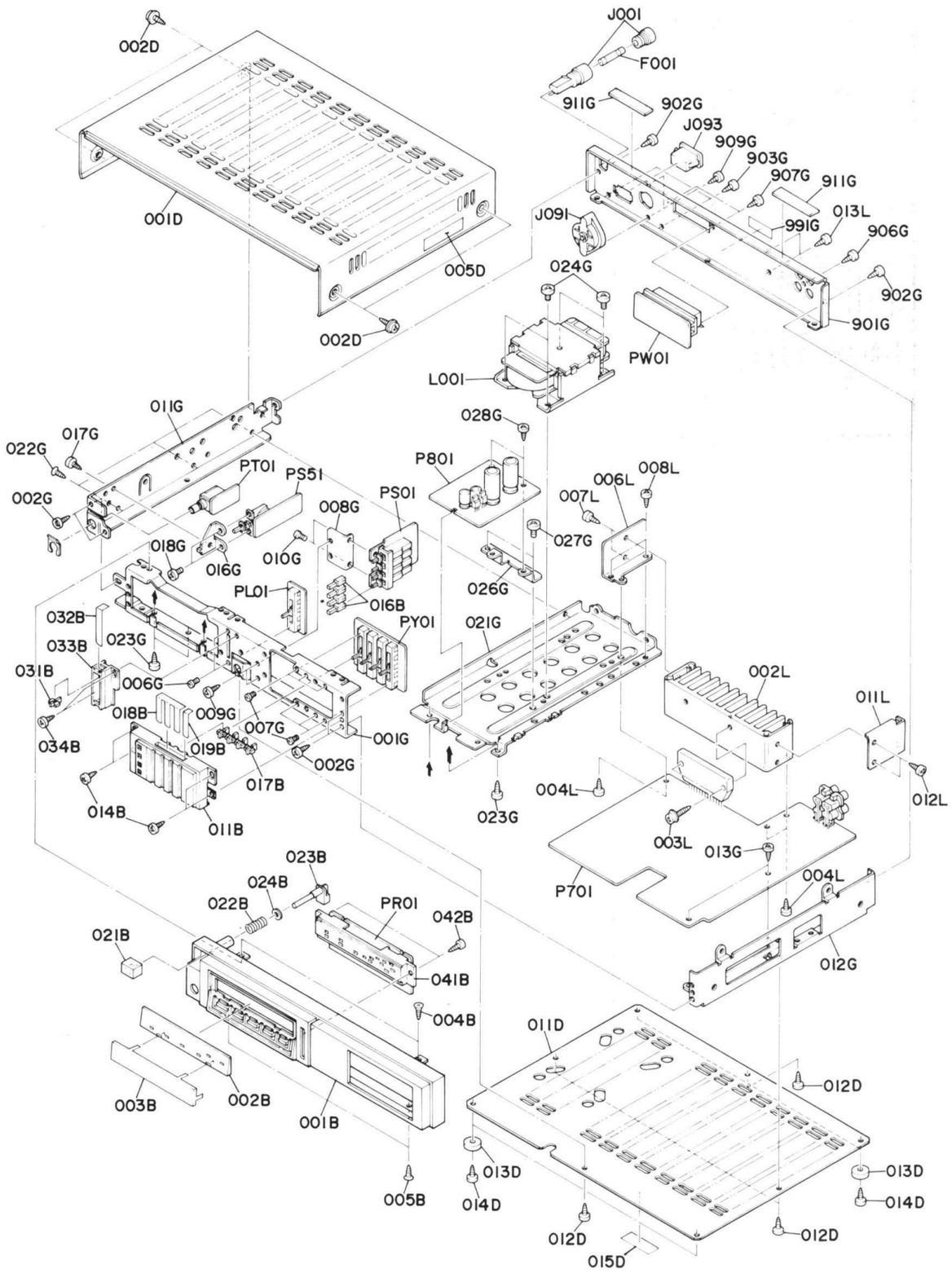

REF. DESIG.	PART NO.	DESCRIPTION
001B	4822 426 51348	Front Panel
002B	4822 450 61348	Window
003B	4822 454 12345	Escutcheon
011B	4822 459 50545	Bushing Assembly
016B	4822 412 20506	Knob, Function
017B	4822 411 61231	Knob, Slide VR
018B	4822 459 40549	Mask, Slide VR
019B	4822 459 40551	Mask, Slide VR
021B	4822 412 20069	Knob, Power Switch
022B	4822 492 42018	Spring
023B	4822 404 20835	Link
024B	4822 532 21182	F. Washer
031B	4822 411 61231	Knob, Effect VR
032B	4822 459 40551	Mask, Effect VR
033B	4822 459 40548	Bushing, Effect VR
041B	4822 466 61303	Spacer, LED Holder
001D	4822 426 50878	Lid, Top Cover
013D	4822 462 40877	Leg
⚠ F001	4822 253 30016	Fuse 0.315A 250V
⚠ J001	4822 256 30233	Jack, Fuse Holder
⚠ J091	4822 272 10236	Voltage Selector
⚠ J092	4822 265 20222	Plug, AC Inlet
⚠ L001	4822 146 21346	Power Transformer
001T	4822 736 20011	User Manual

10. ELECTRICAL PARTS LIST

ASSIGNMENT OF COMMON PARTS CODES.

RESISTOR

R***: (1) GD05---140, Carbon film fixed resistor, ±5%, 1/4W
R***: (2) GD05---160, Carbon film fixed resistor, ±5%, 1/6W

① — Resistance value

Examples
① Resistance value

0.1Ω...001	10Ω...100	1kΩ...102	100kΩ...104
0.5Ω...005	18Ω...180	2.7kΩ...272	680kΩ...684
1Ω...010	100Ω...101	10kΩ...103	1MkΩ...105
6.8Ω...068	390Ω...391	22kΩ...223	4.7MkΩ...475

(Note) Please distinguish 1/4W from 1/6W by the shape of parts used actually.

C***: CERAMIC CAP.
(1) DD1---370, Ceramic condenser
Disc type
①② Temp. coeff. P350 ~ N1000, 50V
Capacity value
Tolerance

Examples
① Tolerance (Capacity deviation)
±0.25pF...0
±0.5pF...1
±5%...5

* Tolerance of COMMON PARTS handled here are as follows:
0.5pF ~ 5pF...±0.25pF
6pF ~ 10pF...±0.5pF
12pF ~ 560pF...±5%

② Capacity value

0.5pF...005	3pF...030	100pF...101
1pF...010	10pF...100	220pF...221
1.5pF...015	47pF...470	560pF...561

C***: CERAMIC CAP.
(1) DK16---300, High dielectric constant ceramic condenser
Disc type
① Temp. chara. 2B4, 50V
Capacity value

Example
② Capacity value

100pF...101	1000pF...102	10000pF...103
470pF...471	2200pF...222	

C***: ELECTROLY CAP. (⧺), FILM CAP. (⧺)
(1) EA------10, Electrolytic condenser
One-way lead type, Tolerance ±20%
①② Dielectric strength
Capacity value

Examples
① Capacity value

0.1μF...104	4.7μF...475	100μF...107
0.33μF...334	10μF...106	330μF...337
1μF...105	22μF...226	1100μF...108
		2200μF...228

② Working voltage

6.3V...006	25V...025
10V...010	35V...035
16V...016	50V...050

(2) DF15---350, Plastic film condenser
One-way type, Mylar ±5% 50V
① Capacity value

Examples
① Capacity value

0.001μF (1000pF)...102	0.1μF...104
0.0018μF.....182	0.56μF...564
0.01μF.....103	1μF...105
0.015μF.....153	

REF. DESIG.	PART NO.	DESCRIPTION
		P701-DELAY MATRIX CIRCUIT BOARD
		P701-CAPACITORS
CE12	4822 122 32486	Ceramic 0.01μF +80% −20%
		P701-RESISTORS
R605	4822 100 10922	22KΩ, Trimming
R708	4822 113 80363	0.22Ω ±5% 3W
R709	4822 116 52858	4.7Ω ±5% ½W
R711	4822 111 90726	10Ω ±5% 2W
RX14	4822 100 10783	4.7KΩ, Trimming
		P701-SEMICONDUCTORS
D601	4822 130 33305	Diode 1SS133, etc.
DN01	4822 130 32508	Diode DSF10C
DN02	4822 130 33305	Diode 1SS133, etc.
DN03	4822 130 33305	Diode 1SS133, etc.
DN04	4822 130 33305	Diode 1SS133, etc.
DN05	4822 130 32508	Diode DSF10C
DN06	4822 130 32508	Diode DSF10C
DN07	4822 130 33305	Diode 1SS133, etc.
DX01	4822 130 33305	Diode 1SS133, etc.
DX02	4822 130 33305	Diode 1SS133, etc.
Q601	4822 209 83631	IC NJM4558D-D
Q602	4822 209 81762	IC MN3008
Q603	4822 209 81763	IC MN3101
Q604	4822 209 83631	IC NJM4558D-D
Q605	4822 209 82826	IC TA7629P
Q606	4822 130 43553	F.E.T. 2SK170
Q701	4822 209 71308	IC STK4024V
QE01	4822 209 83631	IC NJM4558D-D
QE02	4822 209 83631	IC NJM4558D-D
QE03	4822 209 83631	IC NJM4558D-D
QE05	4822 130 43818	Transistor 2SC2878(A)
QE06	4822 130 43818	Transistor 2SC2878(A)
QH01	4822 209 83631	IC NJM4558D-D
QH02	4822 209 83631	IC NJM4558D-D
QN01	4822 209 83312	IC TA7317P
QN02	4822 130 42591	Transistor 2SA1175(F, E)
QN03	4822 130 42591	Transistor 2SA1175(F, E)
QN04	4822 130 42052	Transistor 2SC2785(F, E)
QN05	4822 130 42052	Transistor 2SC2785(F, E)
QN06	4822 130 43818	Transistor 2SC2878(A)
QX01	4822 130 42052	Transistor 2SC2785(F, E)
QX02	4822 130 42052	Transistor 2SC2785(F, E)
QX03	4822 209 83631	IC NJM4558D-D
		P701-MISCELLANEOUS
J601	4822 265 10062	Jack, 3P
J602	4822 265 10063	Jack, 3P
L701	4822 157 51739	Coil, 1μH
JE01	4822 265 30397	Terminal, IN/OUT
JE04	4822 265 10064	Jack, 7P
JH01	4822 265 10062	Jack, 3P
JH02	4822 265 10062	Jack, 3P

REF. DESIG.	PART NO.	DESCRIPTION
		P801-POWER SUPPLY CIRCUIT BOARD
		P801-CAPACITORS
C807	4822 122 40545	Ceramic 0.01μF ±10%
C808	4822 122 40545	Ceramic 0.01μF ±10%
		P801-RESISTORS
⚠ R803	4822 116 60307	1Ω ±5% ¼W, Fusible
⚠ R804	4822 116 60307	1Ω ±5% ¼W, Fusible
⚠ R805	4822 116 60417	15Ω ±5% ¼W, Fusible
⚠ R806	4822 116 60417	15Ω ±5% ¼W, Fusible
⚠ R807	4822 116 60307	1Ω ±5% ¼W, Fusible
		P801-SEMICONDUCTORS
⚠ D801	4822 130 80907	Diode S2VB20
⚠ D802	4822 130 33072	Diode S1VB20
⚠ Q801	4822 209 83821	IC NJM78M06A
⚠ Q802	4822 209 72332	IC NJM79M06A
		P801-MISCELLANEOUS
J801	4822 265 10117	Plug, 5P
J802	4822 265 10062	Jack, 3P
J803	4822 265 10061	Jack, 5P
J804	4822 265 10062	Jack, 3P
J807	4822 265 40209	Terminal, Earth
		PL01-SLIDE VOLUME CIRCUIT BOARD
RL01	4822 105 10817	Variable Resistor, 50KΩ(B); Effect
		PR01-LED CIRCUIT BOARD
DR01	4822 130 33194	L.E.D. LN210RP
DR02	4822 130 33194	L.E.D. LN210RP
DR03	4822 130 33194	L.E.D. LN210RP
DR04	4822 130 33194	L.E.D. LN210RP
DR05	4822 130 33196	L.E.D. LN310GP
DR06	4822 130 33196	L.E.D. LN310GP
JR01	4822 267 30964	Jack, 7P
		PS01-PUSH SWITCH CIRCUIT BOARD
SS01	4822 276 12573	Push Switch
		PS51-POWER SWITCH CIRCUIT BOARD
⚠ GS51	4822 122 40305	Ceramic Cap. 0.01μF 400V
JS51	4822 265 10133	Plug, 2P
⚠ SS51	4822 276 12137	Push Switch, Power

REF. DESIG.	PART NO.	DESCRIPTION
		PT01-HEADPHONE JACK CIRCUIT BOARD
RT01	4822 116 60246	Resistor 220Ω ±5% 1W
JT01	4822 267 30785	Jack, Headphone
JT02	4822 462 41037	Stopper, Jack
		PW01-SPEAKER TERMINAL CIRCUIT BOARD
CW01	4822 122 40516	Ceramic Cap. 0.01μF +100% −0%
JW01	4822 266 30195	Terminal, 4P; Speaker
		PY01-SLIDE SWITCH CIRCUIT BOARD
RY01	4822 105 10805	Variable Resistor, 100KΩ(B)
RY02	4822 105 10805	Variable Resistor, 100KΩ(B)
RY05	4822 105 10817	Variable Resistor, 50KΩ(B)
RY06	4822 105 10817	Variable Resistor, 50KΩ(B)

NOTE ON SAFETY:
Symbol ⚠ Fire or electrical shock hazard. Only original parts should be used to replace any part marked with symbol ⚠. Any other component substitution (other than original type), may increase risk of fire or electrical shock hazard.

SCHEMATIC DIAGRAM

MODEL RV253

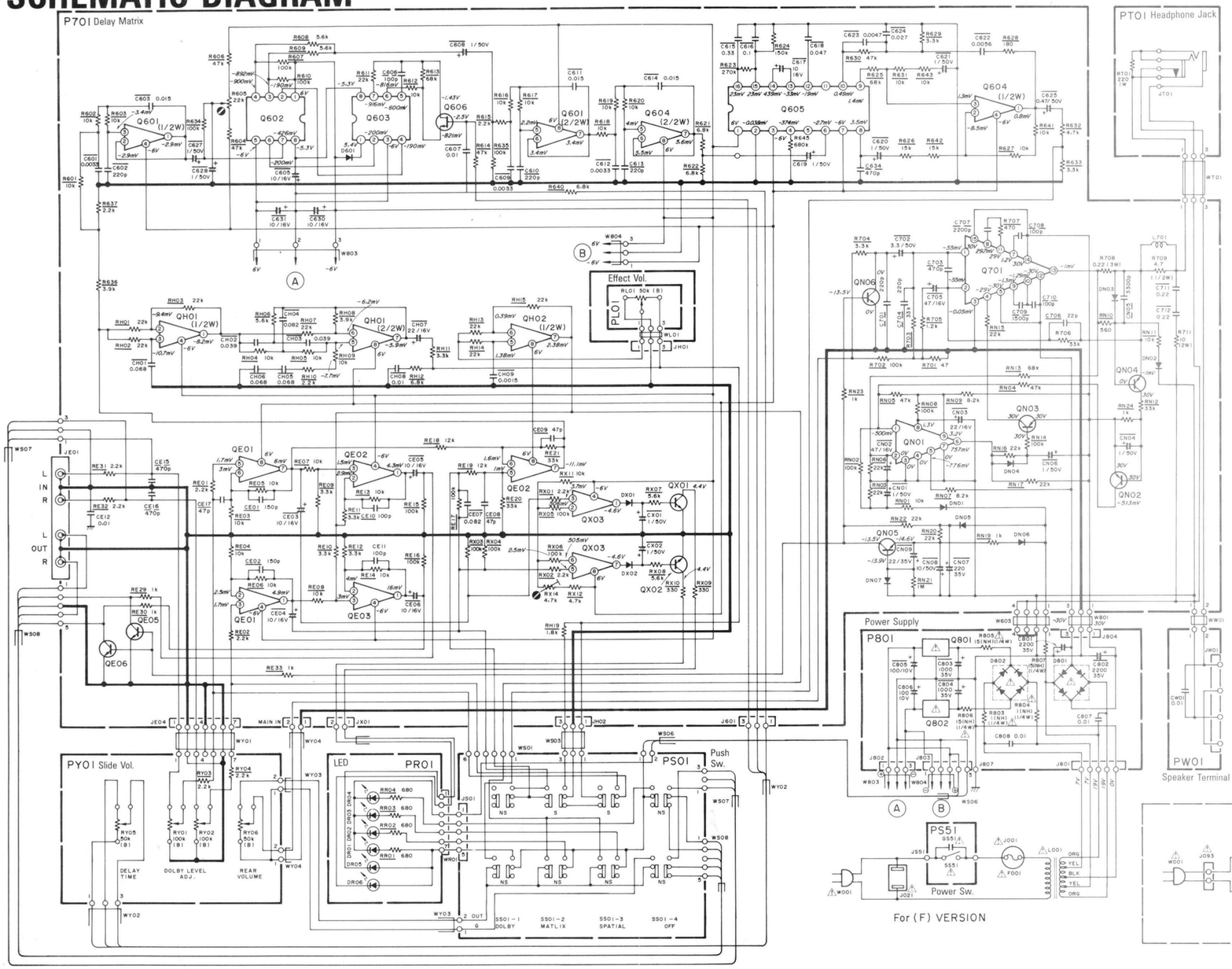

QE01 QE03,QX03,
QH01,QH02,Q601,Q604,
NJM4558D-D
Q602
MN3008
Q603
MN3101
Q605
TA7629P
Q606
2SK170
Q701
STK-4024V
QE05,QE06,QN06
2SC2878(A)
QN01
TA7317P
QN02,QN03
2SA1175(F,E)
QN04,QN05,QX01,QX02
2SC2785(F,E)
Q801
NJM78M06
Q802
NJM79M06
DR01~DR04
LN210RP
DR05,DR06
LN310GP
D601
IS1555,etc.
DN01,DN05,DN06
DSF10C
DN02~DN04,DN07,DX01,DX02
IS133,etc.
D801
S2VB20
D802
S1VB20

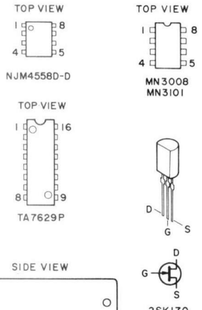

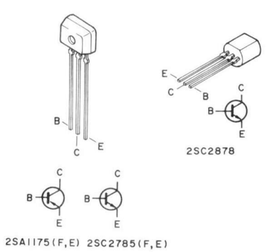

Kind of Common Parts

RESISTOR

R*** (1) GD05 -- 140, Carbon film fixed resistor, ±5% 1/4W
R*** (2) GD05 -- 160, Carbon film fixed resistor, ±5% 1/6W

C*** : **CERAMIC CAP.**
(1) DD1 --- 370, Ceramic condenser, disc type (titan condenser) Temp. coeff. P350 ~ N1000 50V

C*** : **CERAMIC CAP.**
(1) DK16 -- 300, High dielectric constant ceramic condenser, disc type (titan variable) Temp. chara. 2B4 50V

C*** : **ELECTROLY CAP. (⫷)/FILM CAP. (⇌)**
(1) EA ----- 10, Electrolytic condenser, one-way lead type, tolerance ±20%
(2) DF15 -- 350, Plastic film condenser, one-way type, Mylar, ±5% 50V

* In case of ordering the common parts, please establish the correct parts number of 10 figures by the procedure "ASSIGNMENT OF COMMON PARTS CODES"

"SERVICE INFORMATION IS FOR USE BY QUALIFIED RERSONNEL ONLY – ANY MISADJUSTMENT OR MISALIGNMENT MAY BE TREATED AS A NON-WARRANTY REPAIR BY ANY MARANTZ SERVICE CENTER–"

NOTE ON SAFETY:
Symbol ⚠ Fire or electrical shock hazard. Only original partrs should be used to replace any part marked with symbol ⚠. Any other component substitution (other than original type), may increase risk of fire or electrical shock hazard.

Components and wiring are subject to change for modification without notice.

marantz®