Bang & Olufsen

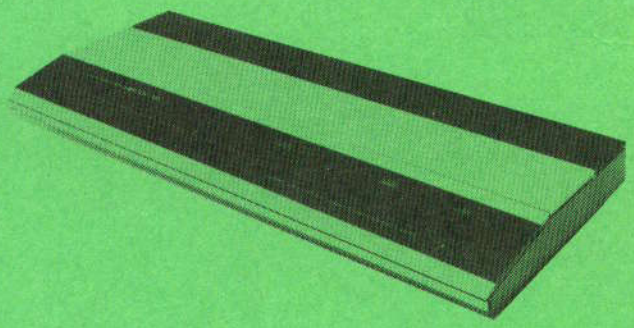

Beomaster 2000
Type 2911/12/13/15/17/19

Beomaster 3000
Type 2931/32/33/35/37/39

Terminal 3000
Type 2044

SERVICEANVISNING
SERVICE MANUAL

Indhold

Diagrammer .....
Halvlederoversigt .....
Elektrisk stykliste .....
Mekanisk stykliste .....
Justeringer .....
Tekniske specifikationer .....
Adskillelse .....
Servicetips .....
Isolationstest .....

Contents

Circuit diagrams 1
Semi-conductors 2
List of electrical parts 3
List of mechanical parts 4
Adjustments 5
Technical specifications 6
Dismantling 7
Service tips 8
Insulation test 9

Bang&Olufsen

Modules

1 RF Section ..... diagr. A, C

2 AF Section, Power Supply & Control ..... diagr. B, C

3 Secondary Control ..... diagr. A, B, C

4 Volume Control ..... diagr. C

5 Volume Display ..... diagr. C

6 Fuses Board ..... diagr. B

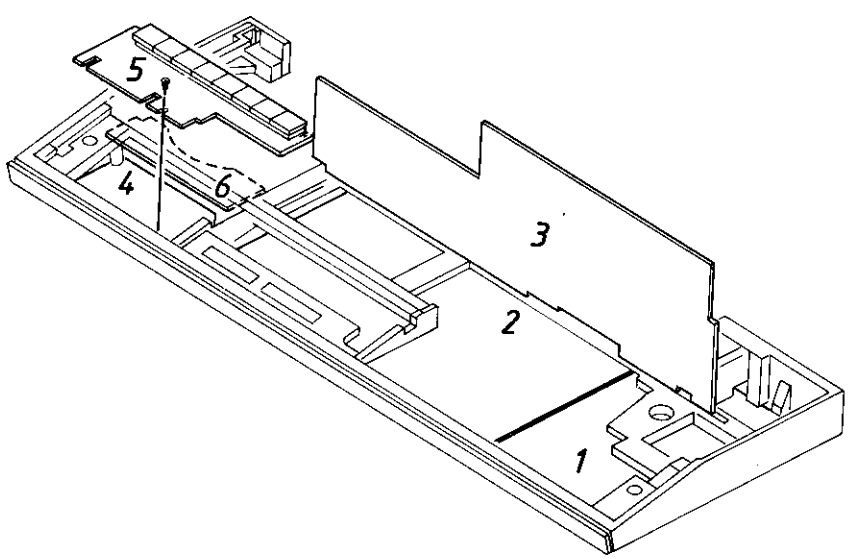

Bang & Olufsen

BLOCK DIAGRAM

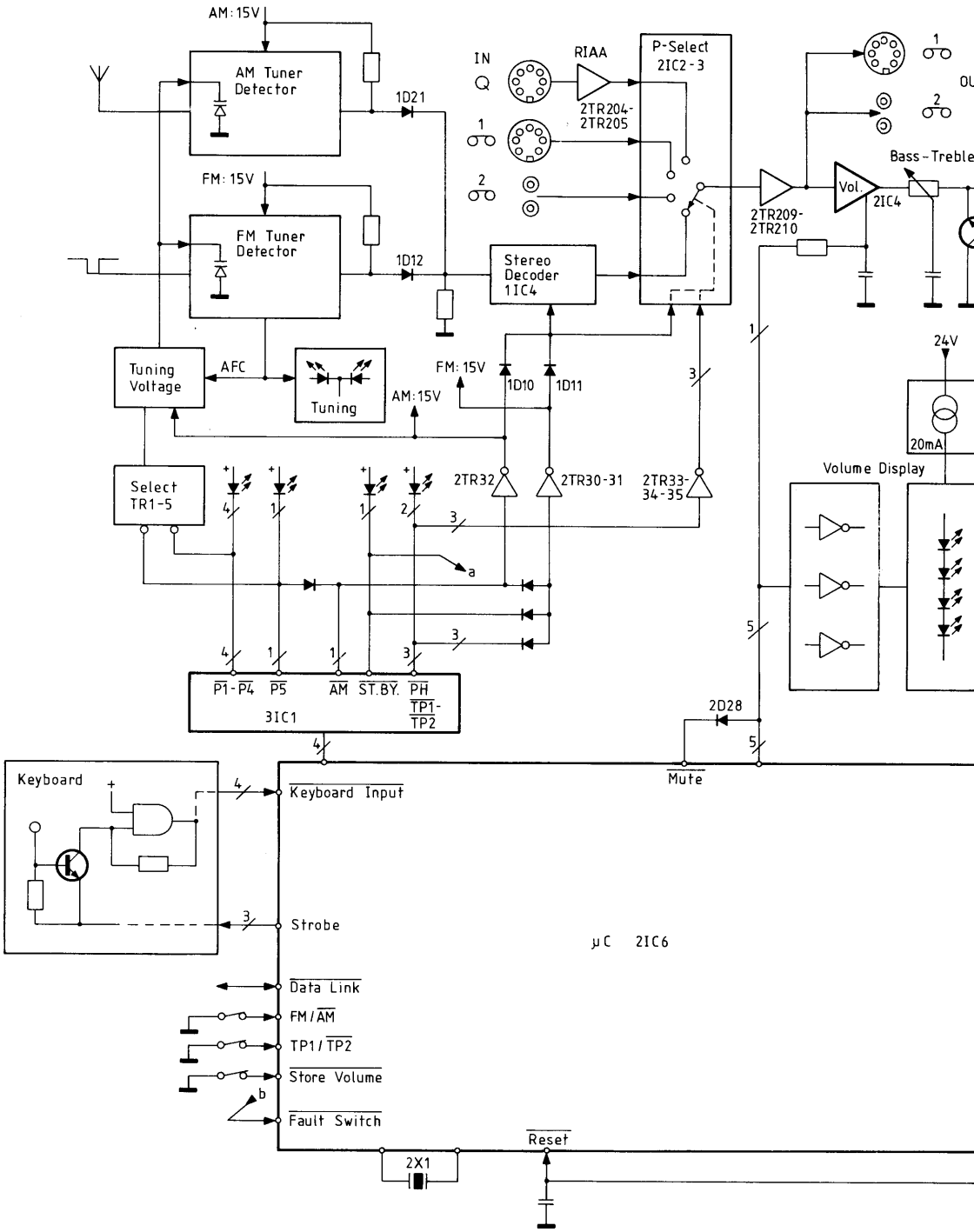

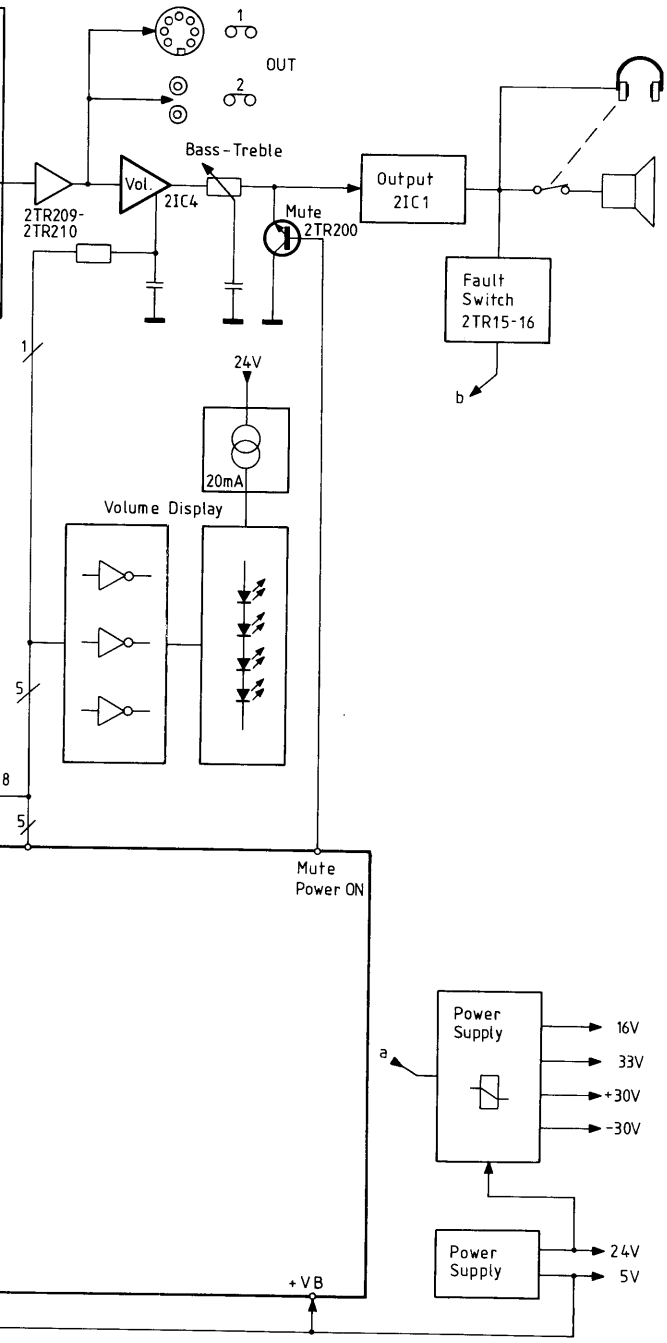
1
OUT
2
Bass-Treble
Vol.
2IC4
2TR209-
2TR210
Mute
2TR200
Output
2IC1
Fault
Switch
2TR15-16
b
1
24V
20mA
Volume Display
5
8
5
Mute
Power ON
Power
Supply
a
16V
33V
+30V
-30V
Power
Supply
24V
5V
+VB

2910-1

DIAGRAM A, type 2911

Before serial no. 2930001

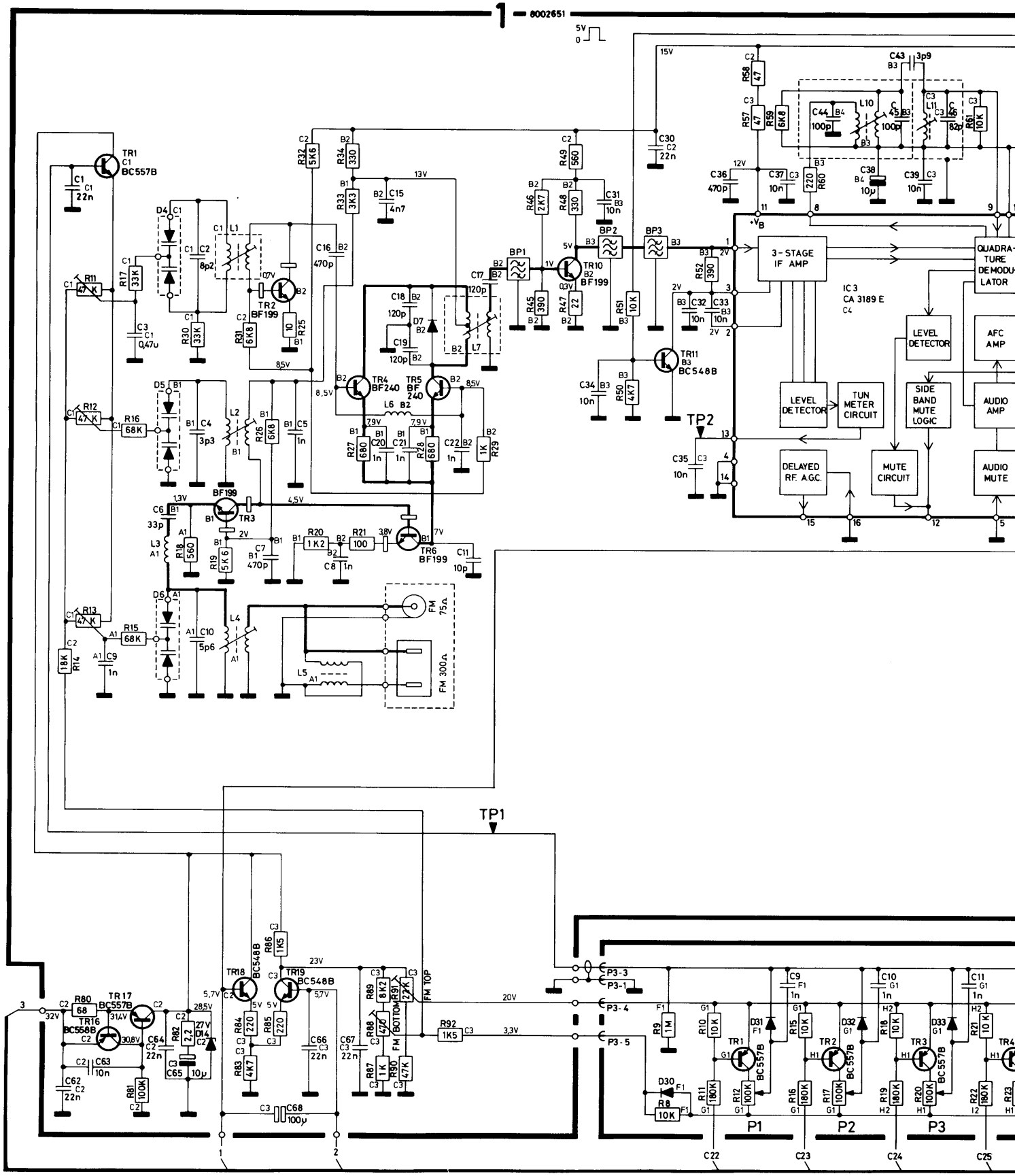

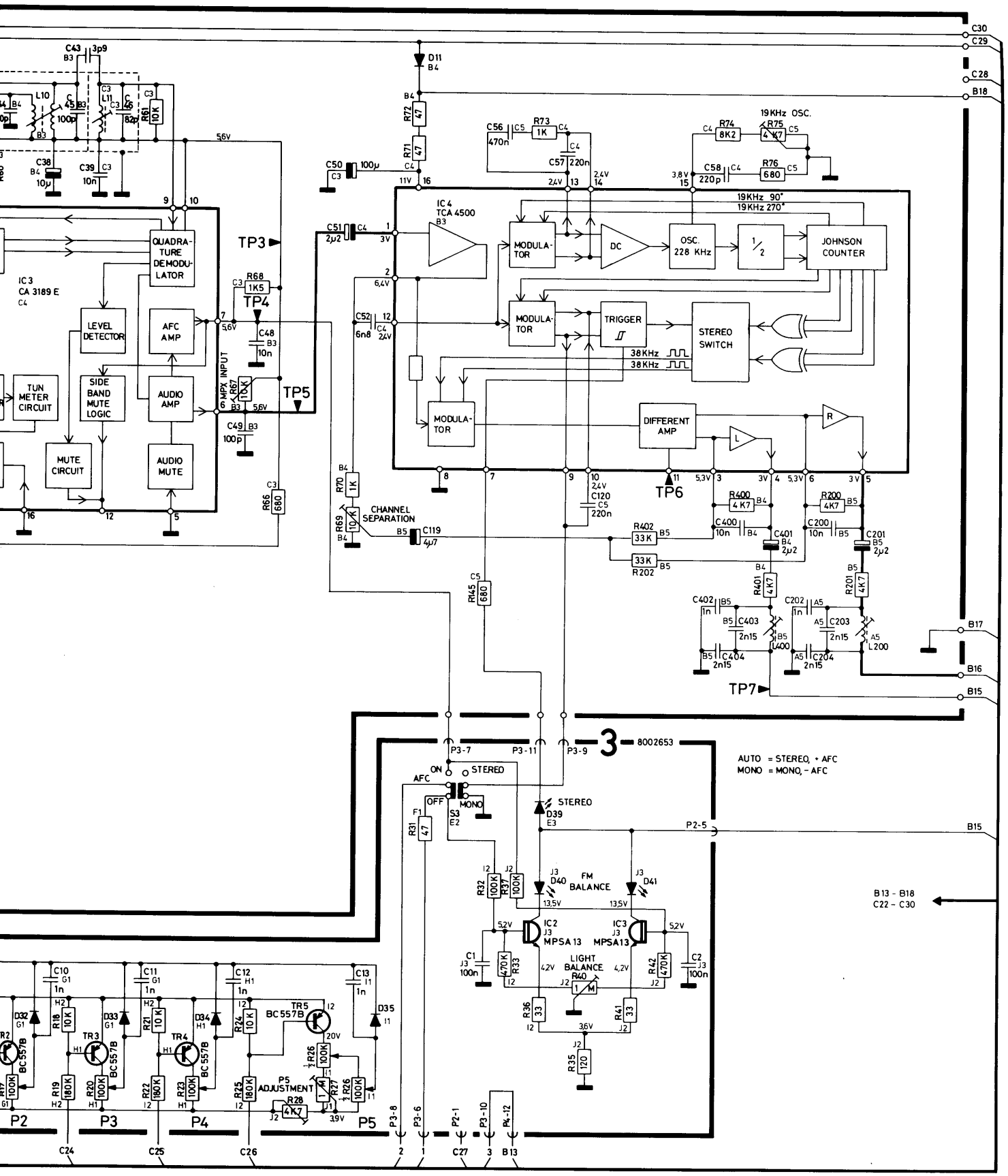
IC 3
CA 3189 E
QUADRATURE DEMODULATOR
LEVEL DETECTOR
AFC AMP
TUN METER CIRCUIT
SIDE BAND MUTE LOGIC
AUDIO AMP
MUTE CIRCUIT
AUDIO MUTE
MPX INPUT
TP3
TP4
TP5
TP6
TP7
IC 4
TCA 4500
MODULATOR
DC
OSC. 228 KHz
JOHNSON COUNTER
TRIGGER
STEREO SWITCH
DIFFERENT AMP
19KHz OSC.
19KHz 90°
19KHz 270°
38KHz
CHANNEL SEPARATION
3
8002653
AUTO = STEREO, + AFC
MONO = MONO, - AFC
ON
AFC
OFF
STEREO
MONO
S3
D39
FM BALANCE
LIGHT BALANCE
IC2 MPSA 13
IC3 MPSA13
P5 ADJUSTMENT
TR5 BC557B
B13 - B18
C22 - C30
P2
P3
P4
P5

Bang & Olufsen

DIAGRAM A, type 2912/17 *Before serial no. 2930001*

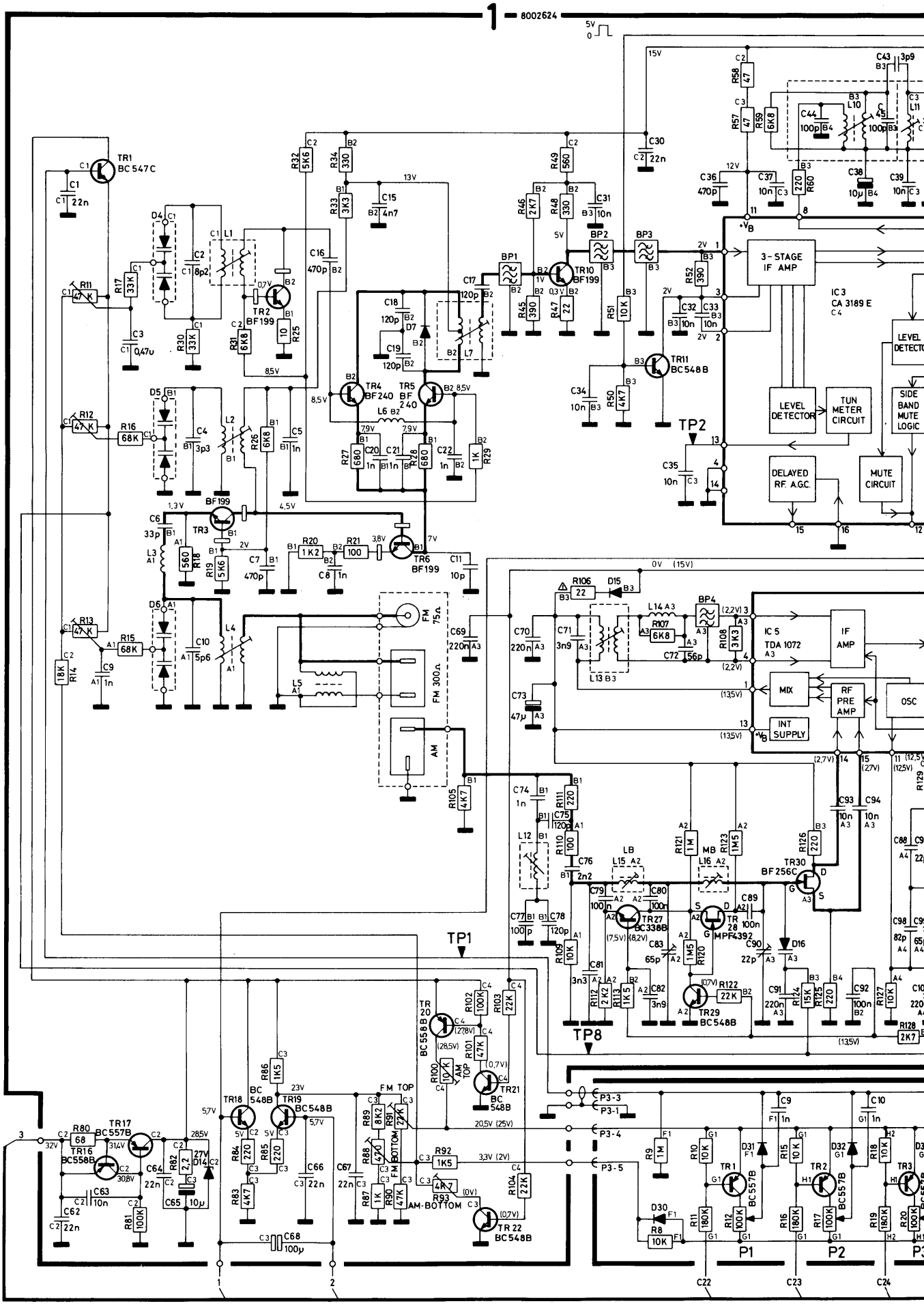

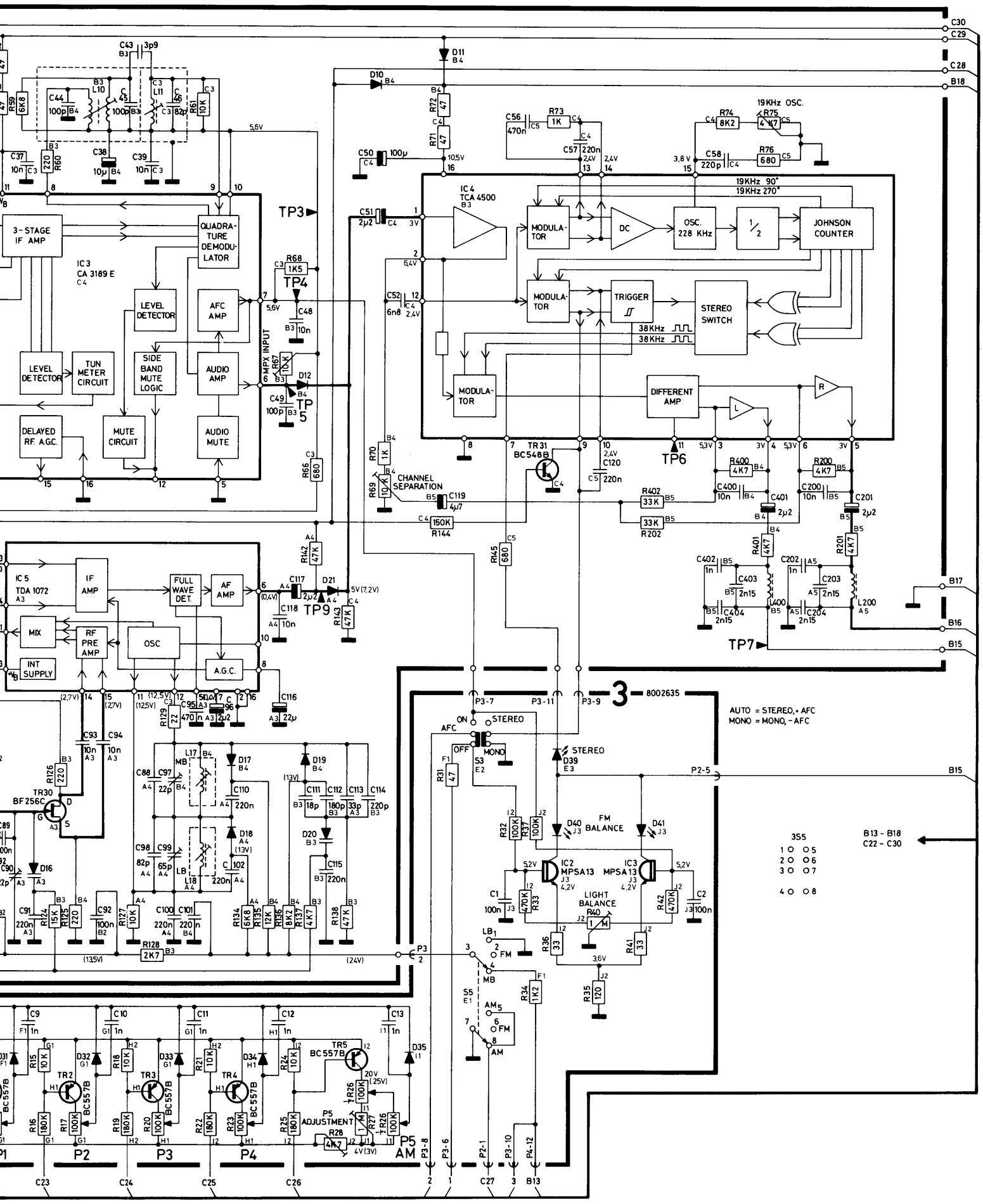
3-STAGE IF AMP
IC 3
CA 3189 E
QUADRATURE DEMODULATOR
LEVEL DETECTOR
AFC AMP
LEVEL DETECTOR
TUN METER CIRCUIT
SIDE BAND MUTE LOGIC
AUDIO AMP
DELAYED RF. A.G.C.
MUTE CIRCUIT
AUDIO MUTE
MPX INPUT
IC 4
TCA 4500
MODULATOR
DC
OSC. 228 KHz
1/2
JOHNSON COUNTER
19KHz OSC.
19KHz 90°
19KHz 270°
MODULATOR
TRIGGER
STEREO SWITCH
38KHz
38KHz
MODULATOR
DIFFERENT AMP
CHANNEL SEPARATION
TR31
BC548B
IC 5
TDA 1072
IF AMP
FULL WAVE DET.
AF AMP
MIX
RF PRE AMP
OSC
INT SUPPLY
A.G.C.
TR30
BF 256C
AUTO = STEREO, + AFC
MONO = MONO, - AFC
STEREO
FM BALANCE
IC2
MPSA13
IC3
MPSA13
LIGHT BALANCE
3S5
B13 - B18
C22 - C30
TR2
TR3
TR4
TR5
BC557B
P5 ADJUSTMENT
P5 AM
P2
P3
P4
8002635

DIAGRAM A, type 2919

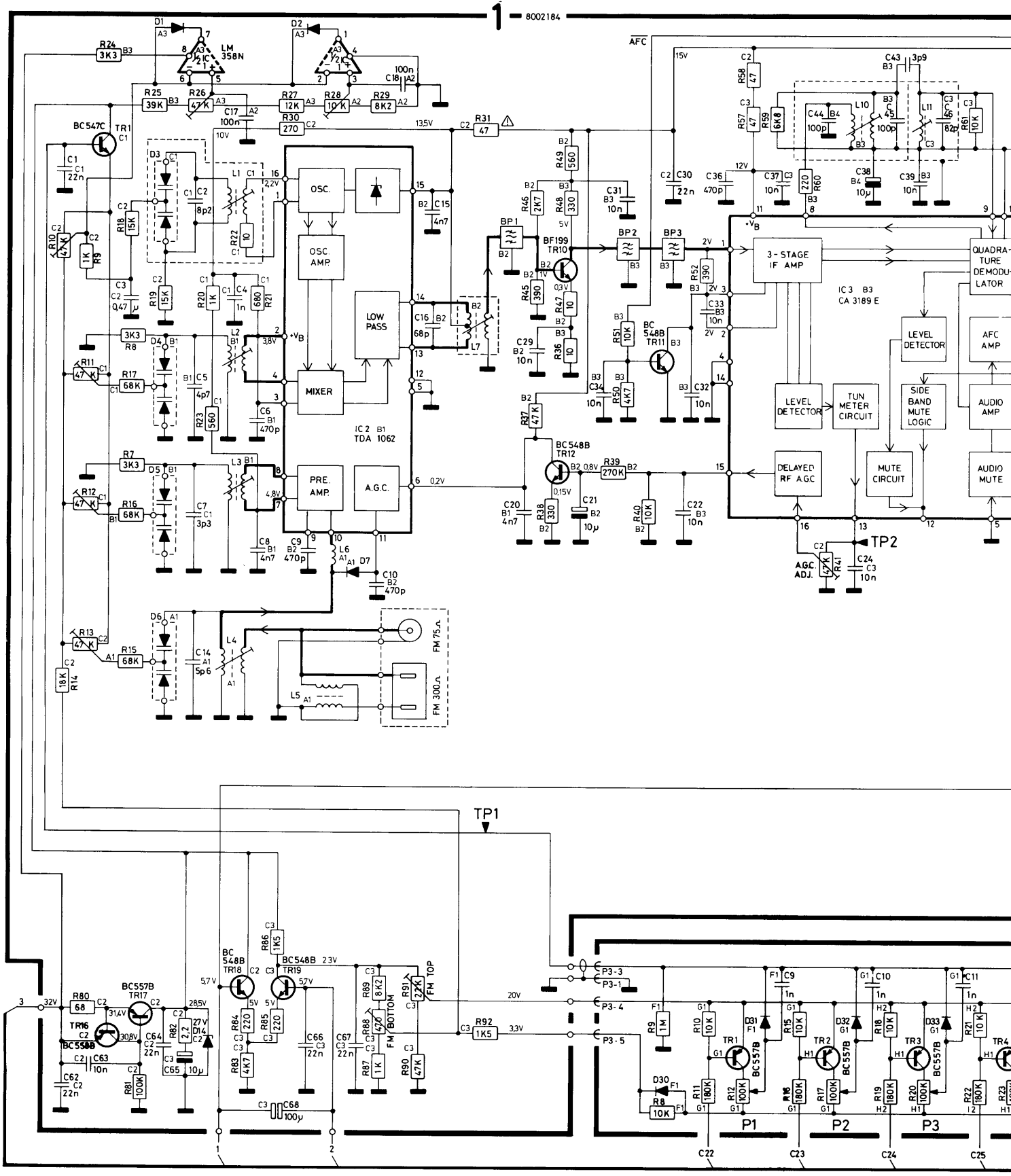

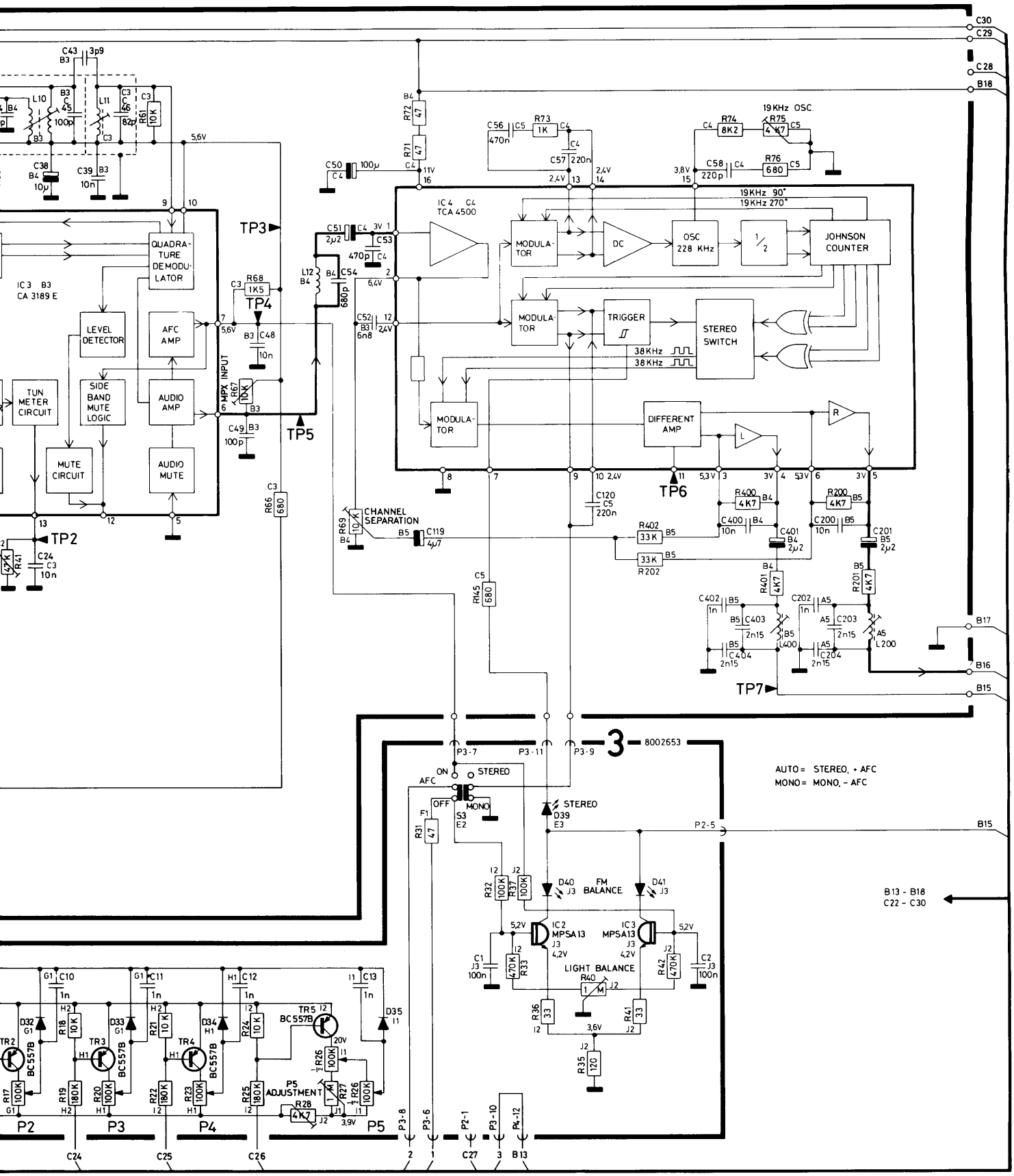
IC 3 B3
CA 3189 E
QUADRATURE DEMODULATOR
LEVEL DETECTOR
AFC AMP
TUN METER CIRCUIT
SIDE BAND MUTE LOGIC
AUDIO AMP
MUTE CIRCUIT
AUDIO MUTE
MPX INPUT
TP2
TP3
TP4
TP5
TP6
TP7
IC 4 C4
TCA 4500
MODULATOR
DC
OSC 228 KHz
JOHNSON COUNTER
TRIGGER
STEREO SWITCH
DIFFERENT AMP
19KHz OSC.
19KHz 90°
19KHz 270°
38KHz
CHANNEL SEPARATION
C30
C29
C28
B18
B17
B16
B15
3
8002653
AUTO = STEREO, + AFC
MONO = MONO, - AFC
ON
AFC
OFF
STEREO
MONO
S3
D39
FM BALANCE
D40
D41
IC2 MPSA13
IC3 MPSA13
LIGHT BALANCE
B13 - B18
C22 - C30
TR2 BC557B
TR3 BC557B
TR4 BC557B
TR5 BC557B
P5 ADJUSTMENT
P2
P3
P4
P5
C24
C25
C26
C27
B13

Bang & Olufsen

DIAGRAM A, type 2911/13

From serial no. 2930001

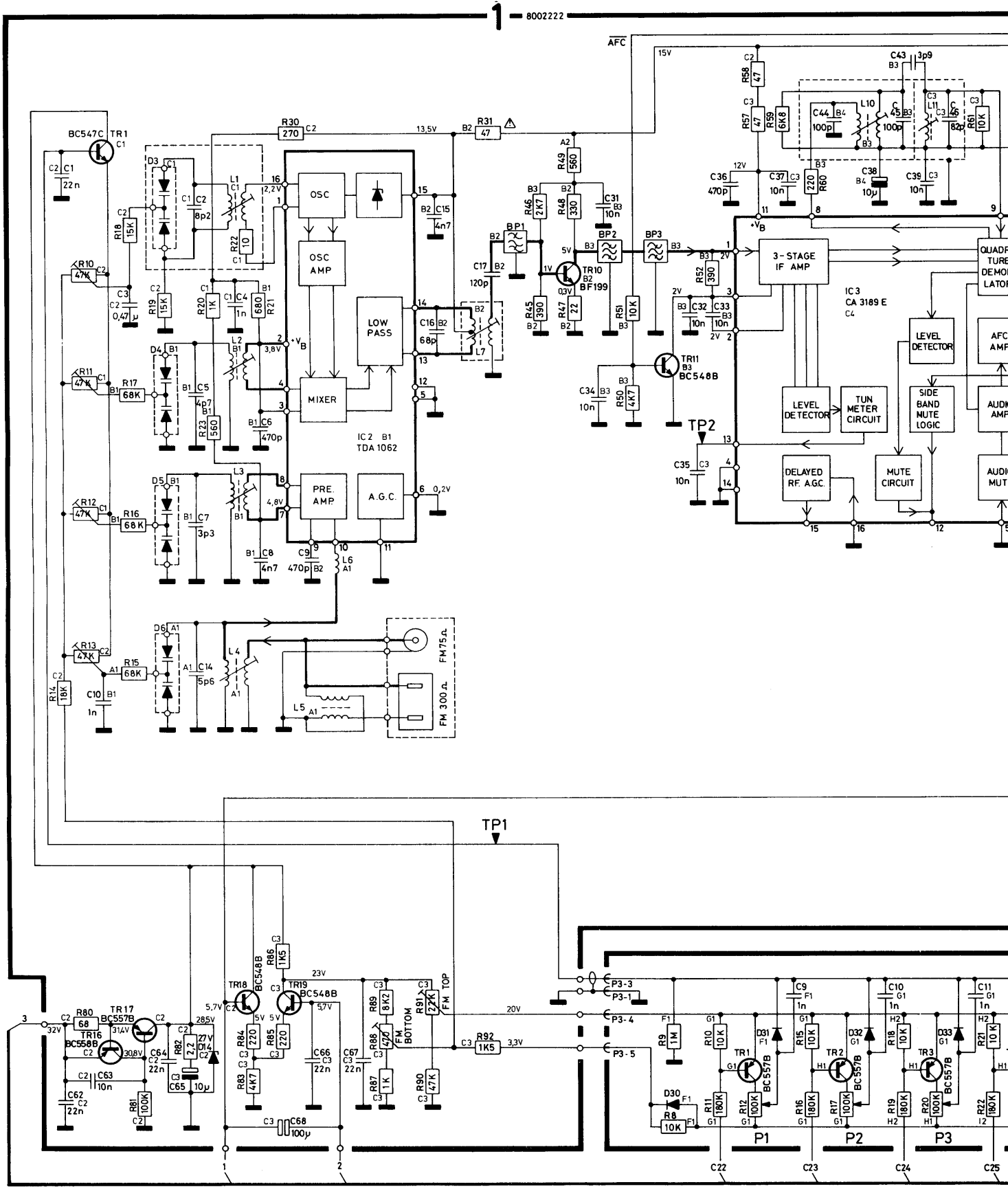

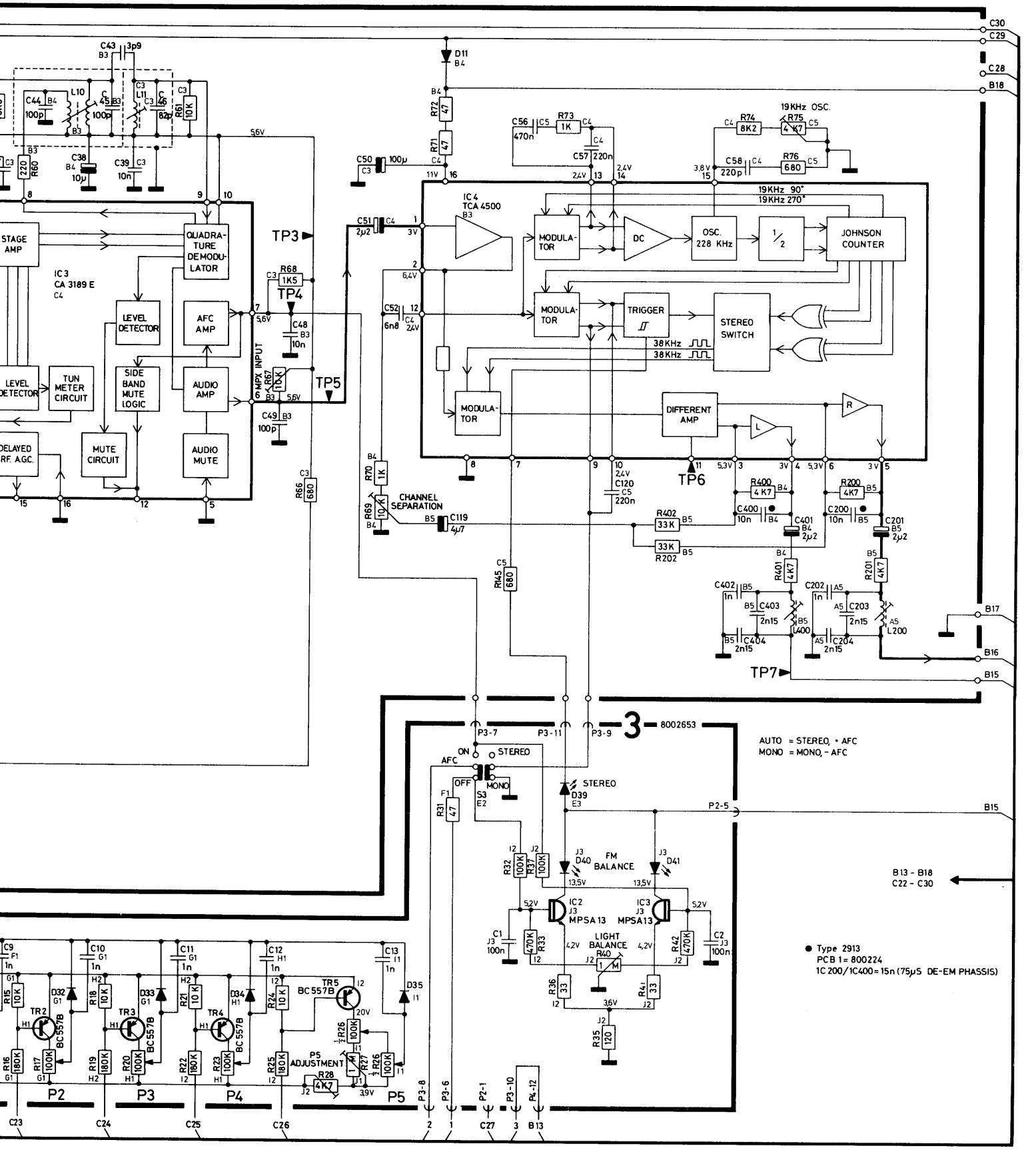
IC 3
CA 3189 E
STAGE AMP
QUADRATURE DEMODULATOR
LEVEL DETECTOR
AFC AMP
SIDE BAND MUTE LOGIC
AUDIO AMP
TUN METER CIRCUIT
MUTE CIRCUIT
AUDIO MUTE
DELAYED R.F. A.G.C.
MPX INPUT
TP3
TP4
TP5
IC 4
TCA 4500
MODULATOR
DC
OSC. 228 KHz
JOHNSON COUNTER
TRIGGER
STEREO SWITCH
DIFFERENT AMP
19KHz OSC.
19KHz 90°
19KHz 270°
38KHz
CHANNEL SEPARATION
TP6
TP7
3 8002653
AUTO = STEREO, + AFC
MONO = MONO, - AFC
ON
AFC
OFF
STEREO
MONO
S3
FM BALANCE
LIGHT BALANCE
IC2 MPSA 13
IC3 MPSA13
P5 ADJUSTMENT
TR2 BC557B
TR3 BC557B
TR4 BC557B
TR5 BC557B
P2
P3
P4
P5
B13 - B18
C22 - C30
● Type 2913
PCB 1 = 800224
1C 200/1C400 = 15n (75µS DE-EM PHASSIS)

DIAGRAM A, type 2912/15/17 *From serial no. 2930001*

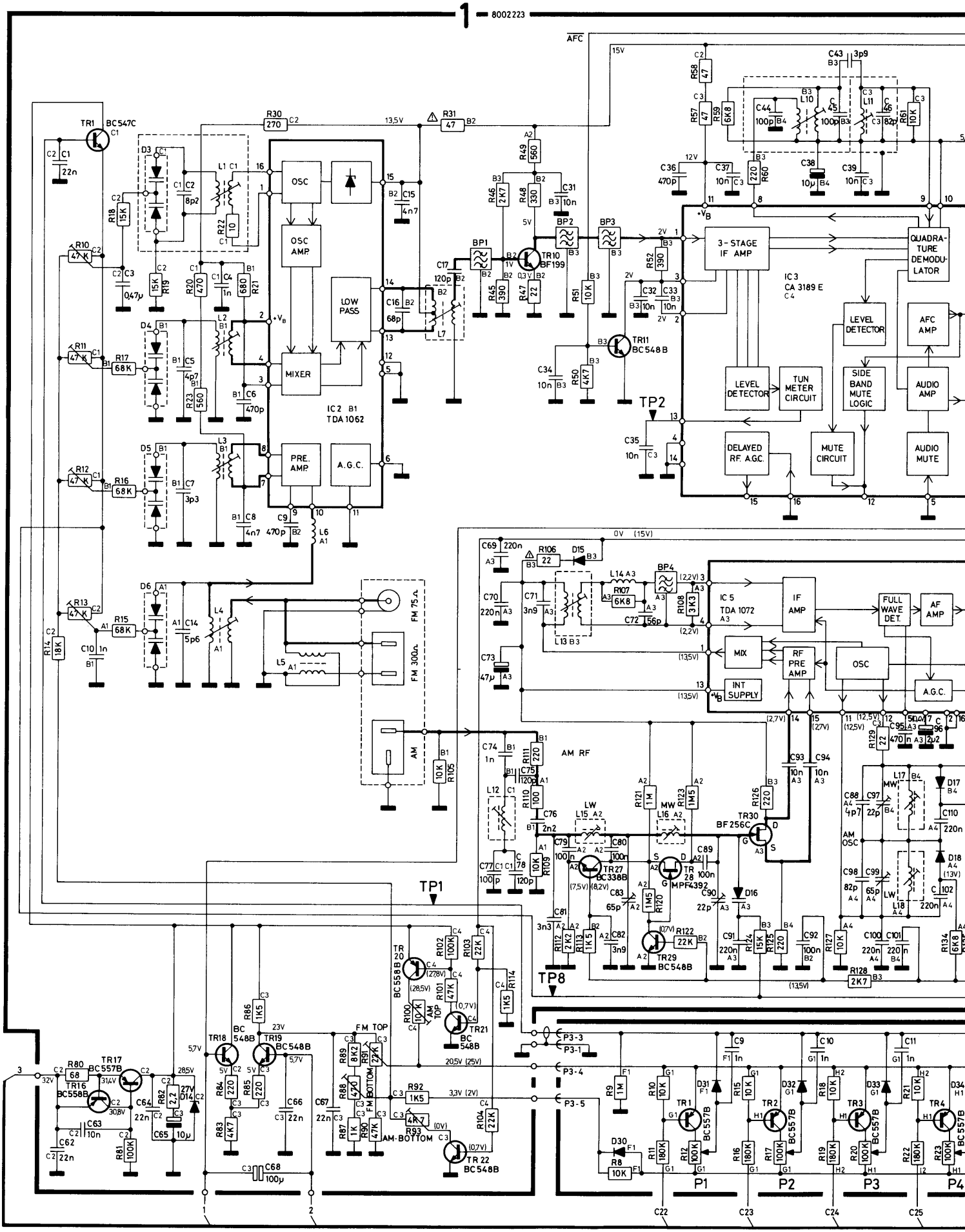

Bang & Olufsen

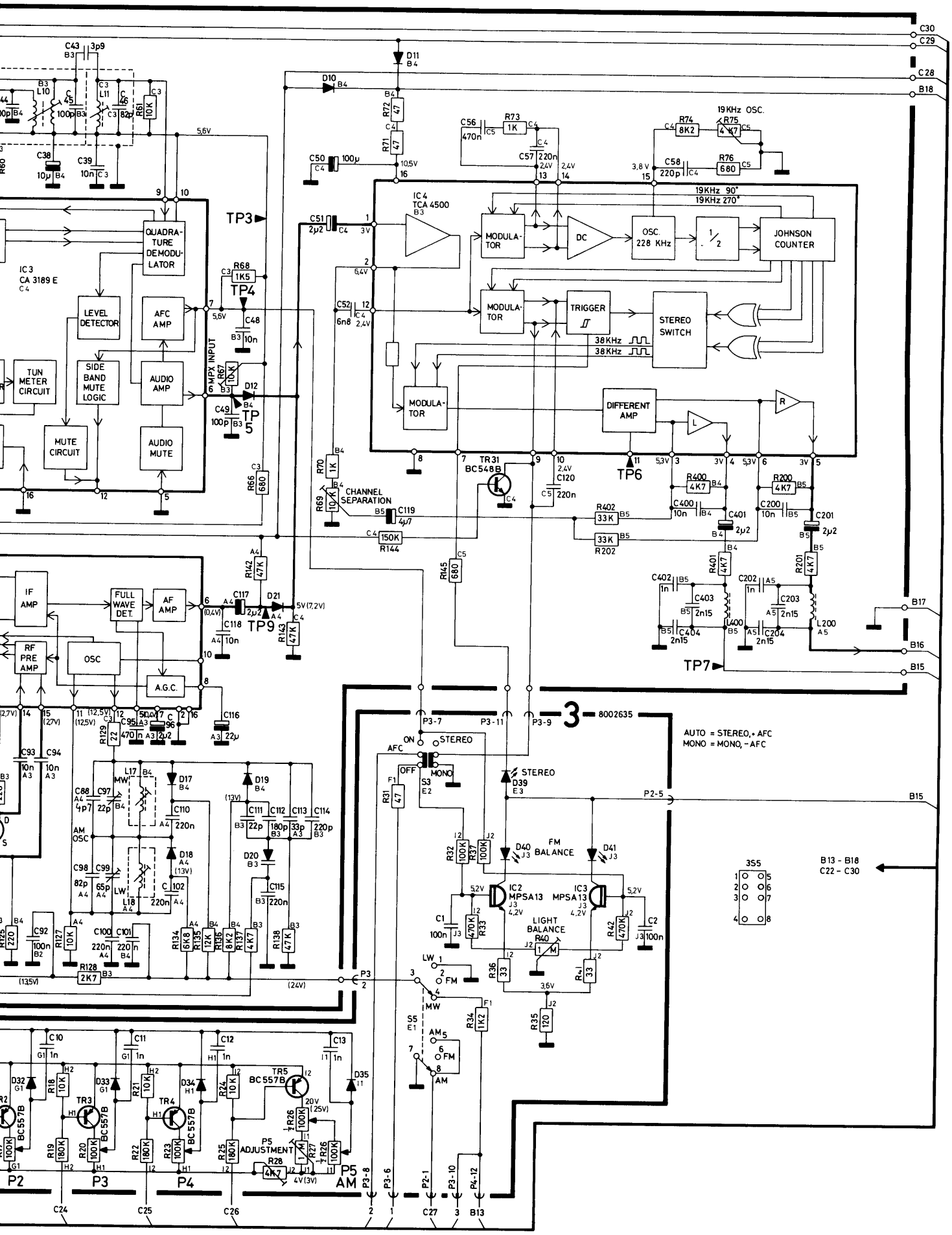

Bang & Olufsen

DIAGRAM B, all types

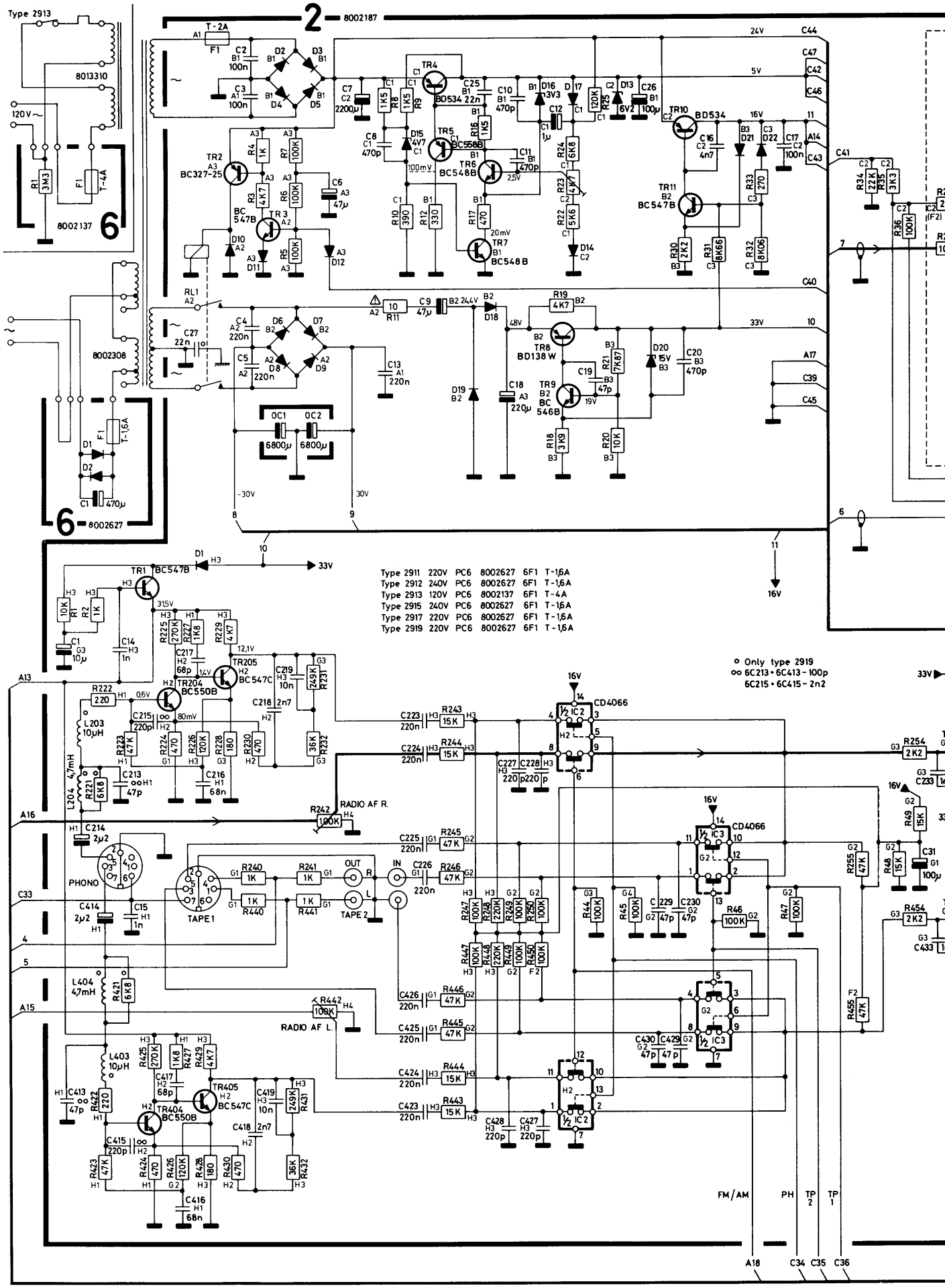

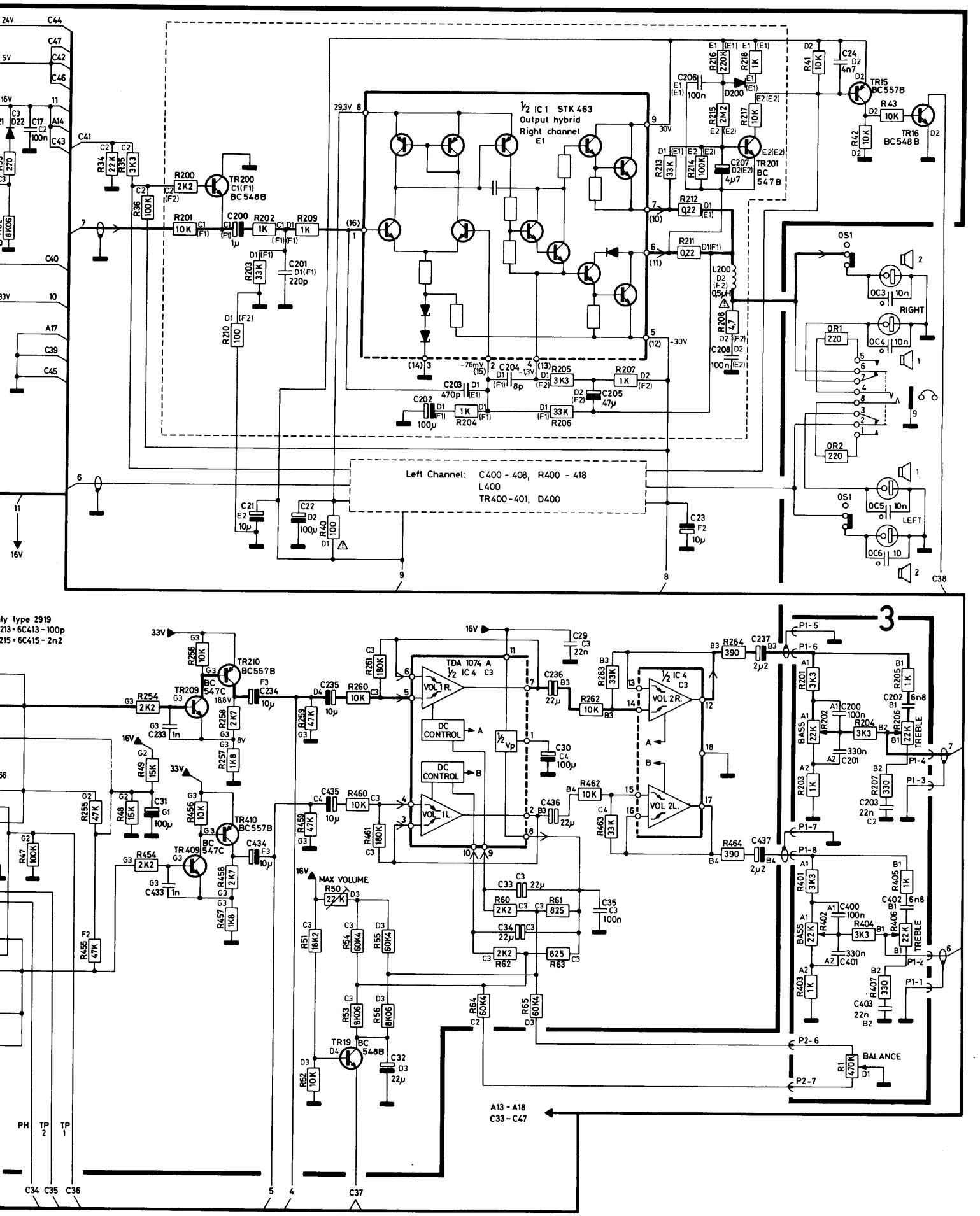
½ IC 1 STK 463
Output hybrid
Right channel
E1
Left Channel: C400 - 408, R400 - 418
L400
TR400-401, D400
TR200 C1(F1) BC548B
TR201 BC 547B
TR15 BC557B
TR16 BC548B
TR210 BC557B
TR209 BC 547C
TR410 BC557B
TR409 BC 547C
TR19 BC 548B
TDA 1074 A
½ IC 4 C3
VOL 1R.
VOL 1L.
VOL 2R.
VOL 2L.
DC CONTROL
MAX VOLUME
BASS
TREBLE
BALANCE
RIGHT
LEFT
A13 - A18
C33 - C47
PH
TP 2
TP 1

DIAGRAM C, all types

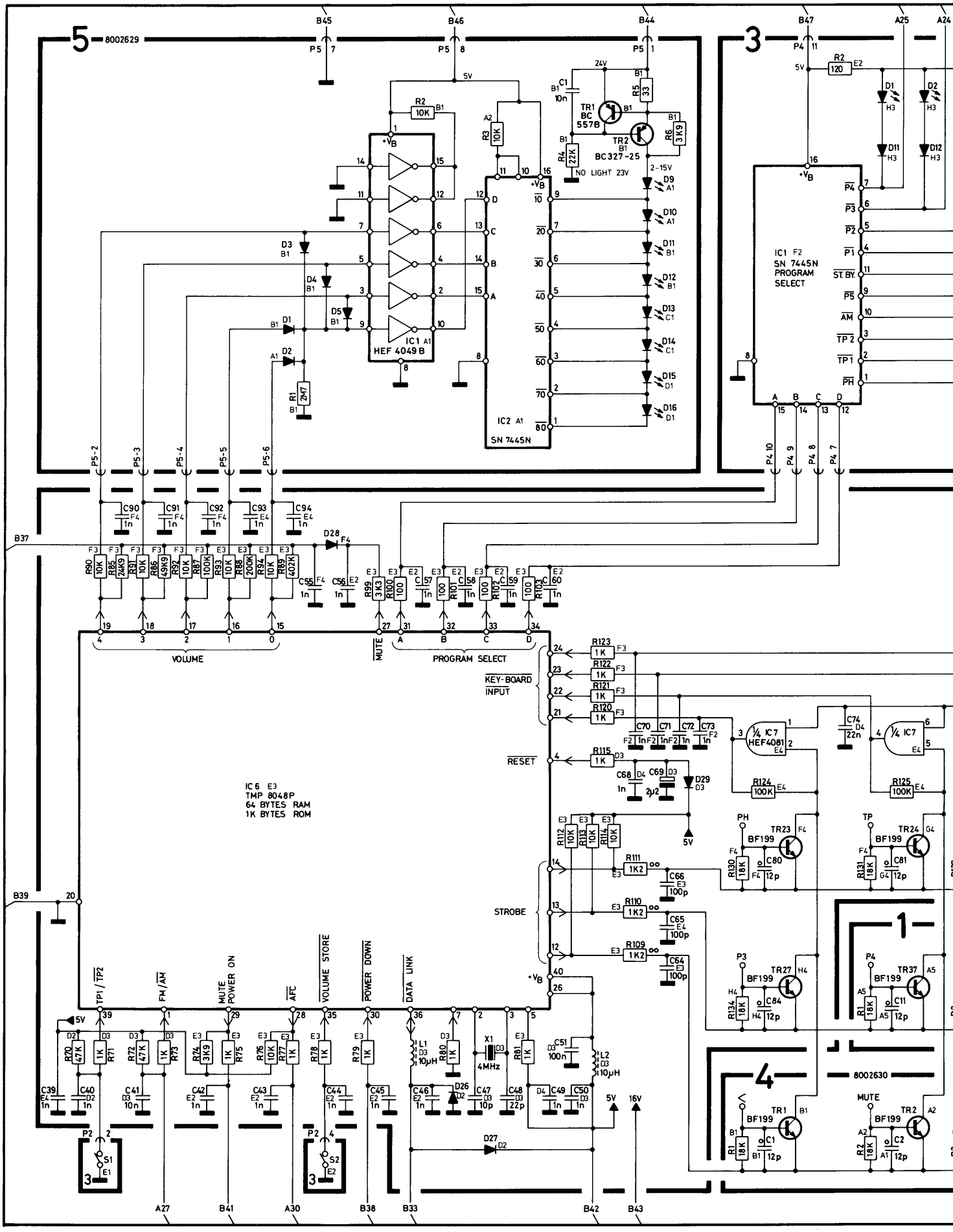

Bang & Olufsen

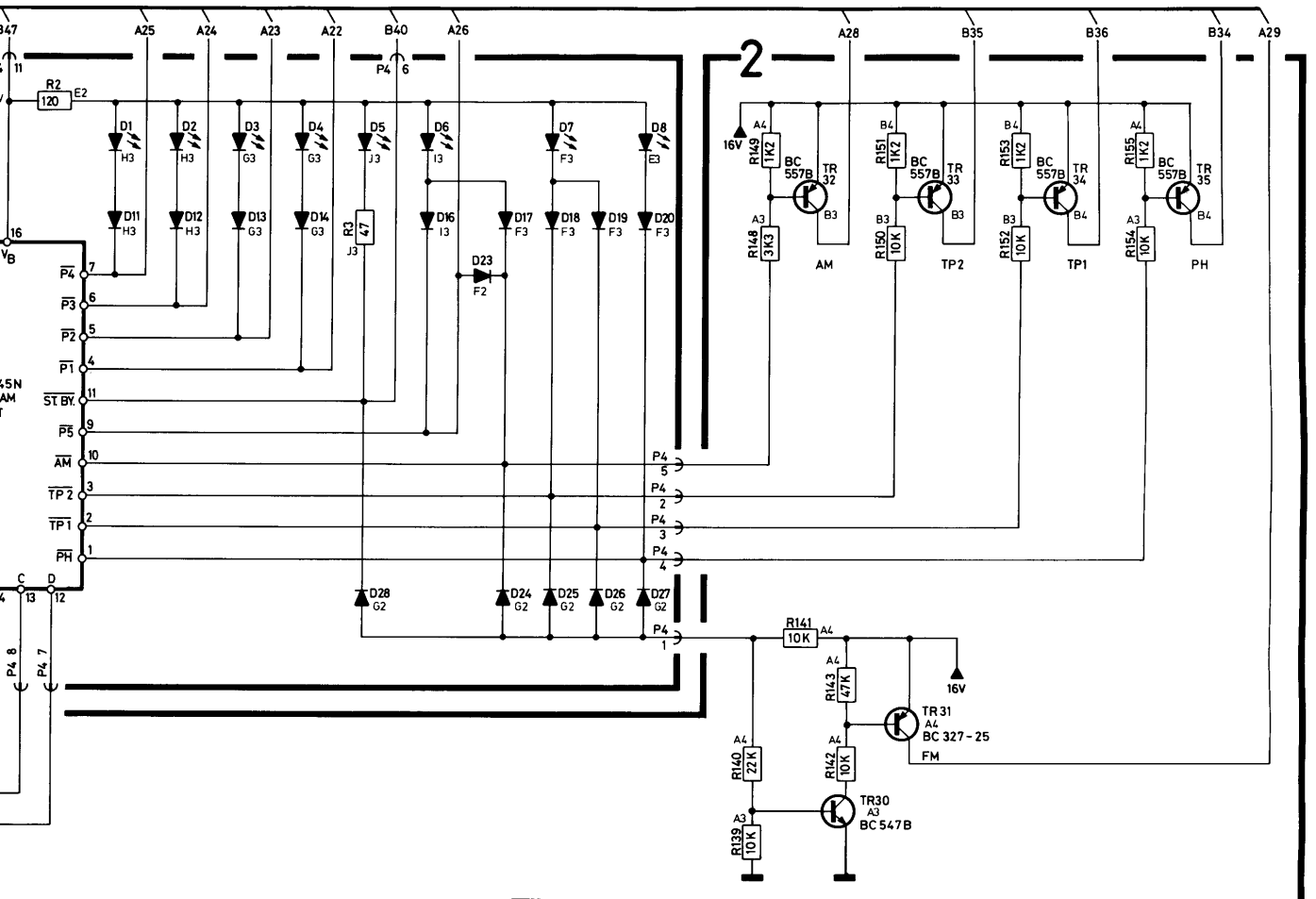

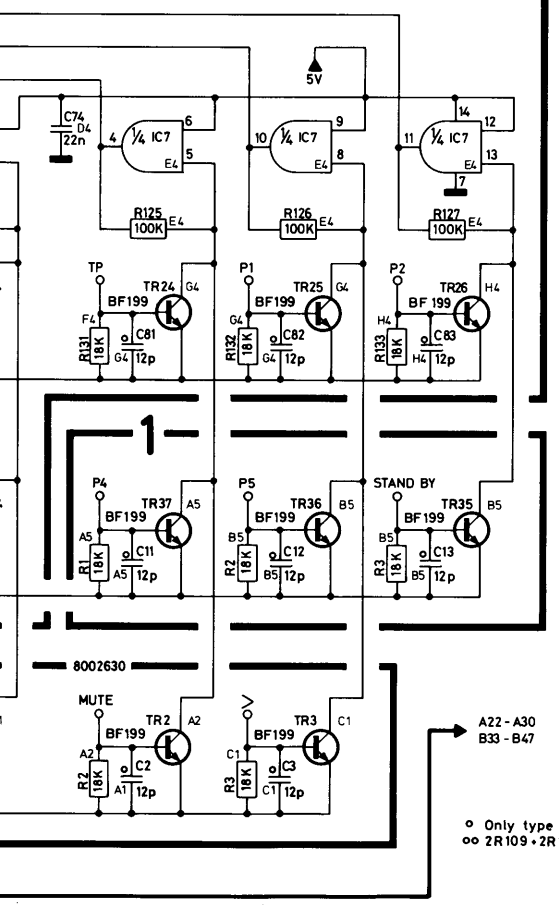

VOLUME STEP	VOLUME CONTROL 2IC6 (8048) OUTPUT 4	3	2	1	0	5IC2 (7445) INPUT D	C	B	A	OUTPUT PIN LOW	
0	0	0	0	0	0	1	1	1	1	X	
1	0	0	0	0	1	0	1	1	1	9	5D9 10
2	0	0	0	1	0						
3	0	0	0	1	1						
4	0	0	1	0	0	0	1	1	0	7	5D9 10, 5D10 20
5	0	0	1	0	1						
6	0	0	1	1	0						
7	0	0	1	1	1						
8	0	1	0	0	0	0	1	0	1	6	5D9 10, 5D10 20, 5D11 30
9	0	1	0	0	1						
10	0	1	0	1	0						
11	0	1	0	1	1						
12	0	1	1	0	0	0	1	0	0	5	5D9 10, 5D10 20, 5D11 30, 5D12 40
13	0	1	1	0	1						
14	0	1	1	1	0						
15	0	1	1	1	1						
16	1	0	0	0	0	0	0	1	1	4	5D9 10, 5D10 20, 5D11 30, 5D12 40, 5D13 50
17	1	0	0	0	1						
18	1	0	0	1	0						
19	1	0	0	1	1						
20	1	0	1	0	0	0	0	1	0	3	5D9 10, 5D10 20, 5D11 30, 5D12 40, 5D13 50, 5D14 60
21	1	0	1	0	1						
22	1	0	1	1	0						
23	1	0	1	1	1						
24	1	1	0	0	0	0	0	0	1	2	5D9 10, 5D10 20, 5D11 30, 5D12 40, 5D13 50, 5D14 60, 5D15 70
25	1	1	0	0	1						
26	1	1	0	1	0						
27	1	1	0	1	1						
28	1	1	1	0	0	0	0	0	0	1	5D9 10, 5D10 20, 5D11 30, 5D12 40, 5D13 50, 5D14 60, 5D15 70, 5D16 80
29	1	1	1	0	1						
30	1	1	1	1	0						
31	1	1	1	1	1						

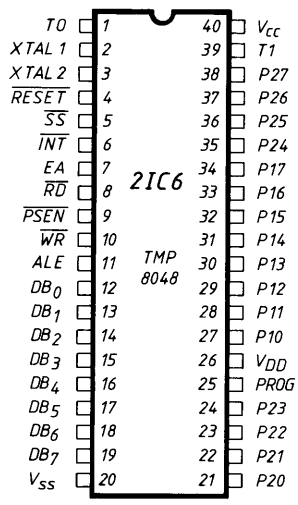

FUNCTION TABLE 3IC1 (7445) INPUTS D	C	B	A	FUNCTION	PIN LOW
0	0	0	0	PHONO	1
0	0	0	1	TAPE 1	2
0	0	1	0	TAPE 2	3
0	0	1	1	AM	4
0	1	0	0	P5	5
0	1	0	1	ST. BY	6
0	1	1	0	P1	7
0	1	1	1	P2	9
1	0	0	0	P3	10
1	0	0	1	P4	11

Bang&Olufsen

SEMI-CONDUCTORS

17	20	22	24	31	32	42
B C E	E C B	D G S	G S D	B C E	E C B	B C E

Transistors

1TR1	8320377	**20**	BC 547 C
		20	BC 182 C/CK
		17	BC 182 CL
1TR2-3	8320281	**42**	BF 199
1TR4-5	8320311	**42**	BF 240
1TR6/10	8320281	**42**	BF 199
1TR11-12	8320108	**20**	BC 548 B
1TR16	8320104	**20**	BC 558 B
1TR17	8320152	**20**	BC 557 B
1TR18-19	8320108	**20**	BC 548 B
1TR20	8320104	**20**	BC 558 B
1TR21-22	8320108	**20**	BC 548 B
1TR27	8320329	**20**	BC 338-25
1TR28	*8320396	**24**	MPF 4392
		24	2N 5639
		24	2N 4392
1TR29	8320108	**20**	BC 548 B
1TR30	8320535	**22**	BF 256 C
1TR31	8320108	**20**	BC 548 B
1TR35-37	8320281	**42**	BF 199
2TR1	8320097	**20**	BC 547 B
2TR2	8320316	**20**	BC 327-25
2TR3	8320097	**20**	BC 547 B
2TR4	8320369	**31**	BD 534
2TR5	8320104	**20**	BC 558 B
2TR6-7	8320108	**20**	BC 548 B
2TR8	8320241	**32**	BD 138 W
2TR9	8320237	**20**	BC 546 B
2TR10	8320369	**31**	BD 534
2TR11	8320097	**20**	BC 547 B
2TR15	8320152	**20**	BC 557 B
2TR16/19	8320108	**20**	BC 548 B
2TR23-27	8320281	**42**	BF 199
2TR30	8320097	**20**	BC 547 B
2TR31	8320316	**20**	BC 327-25
2TR32-35	8320152	**20**	BC 557 B
2TR400	8320108	**20**	BC 548 B
2TR401	8320097	**20**	BC 547 B
2TR404	8320405	**20**	BC 550 B
2TR405/409	8320377	**20**	BC 547 C
2TR410/3TR1-5	8320152	**20**	BC 557 B
4TR1-3	8320281	**42**	BF 199
5TR1	8320152	**20**	BC 557 B
5TR2	8320316	**20**	BC 327-25

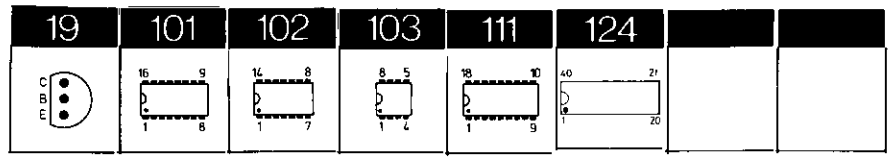

IC's

1IC1	8340569	**103**	LM 358 N
1IC2	8340198	**101**	TDA 1062
1IC3	*8340233	**101**	CA 3189 E
1IC4	8340284	**101**	TCA 4500 A
1IC5	8340489	**101**	TDA 1072
2IC1	8350000		STK 463 ST
2IC2-3	△8340202	**102**	HEF 4066 BP
		102	CD 4066 BCN
		102	MC 14066 BCP
2IC4	8340187	**111**	TDA 1074 A
2IC6	△8340543	**124**	TMP 8048
2IC7	△8340172	**102**	CD 4081 BCN
		102	HEF 4081 BP
		102	MC 14081 BCP
3IC1	8340192	**101**	SN 7445 N
		101	DM 7445 N
3IC2-3	8340054	**19**	MPS A13
5IC1	8340542	**101**	HEF 4049 BP
5IC2	8340192	**101**	SN 7445 N
		101	DM 7445 N

*Specielt udvalgt eller bearbejdet eksemplar.
*Specially selected or adapted sample.
*Speziell ausgewähltes und bearbeitetes Exemplar.

△Betyder statisk elektricitet kan ødelægge komponenten.
△Indicates static electricity may destroy the component.
△Bedeutet statische Elektrizität die Komponente zerstören kann.
△Signifi que électricité statique peut detruire le composant.

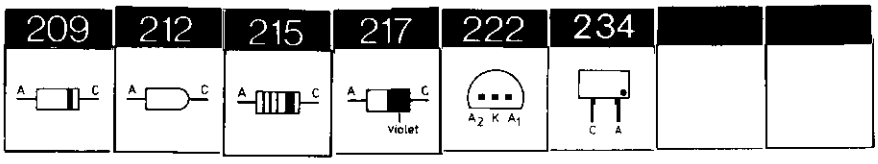

Diodes

1D1-2	8300058	**209**	1N 4148
		215	1N 4148
		217	SFD 184
1D3-6	8300308	**222**	BB 204
1D7	8300306	**209**	BA 479
1D10-12	8300058	**209**	1N 4148
		215	1N 4148
		217	SFD 184
1D14	*8340105	**209**	ZTK 27 SB
1D15	8300058	**209**	1N 4148
		215	1N 4148
		217	SFD 184
1D16	8300384	**234**	KV 1226 Y
1D17-19	8300385	**209**	BA 423
1D20	8300384	**234**	KV 1226 Y
1D21	8300058	**209**	1N 4148
2D1		**215**	1N 4148
		217	SFD 184
2D2-5	8300023	**209**	1N 4002
2D6-9	8300294	**209**	MR 501
		212	1N 5401
2D10-11	8300023	**209**	1N 4002
2D12	8300058	**209**	1N 4148
		215	1N 4148
		217	SFD 184
2D13	8300201	**209**	ZPD 6.2V
		209	BZX 79 C 6.2V
		209	BZX 83 C 6.2V
2D14	8300058	**209**	1N 4148
		215	1N 4148
		217	SFD 184

2D15	8300036	**209**	ZPD 4.7V
		209	BZX 79 C 4.7V
		209	BZX 83 C 4.7V
2D16	8300135	**209**	ZPD 3.3V
		209	BZX 79 C 3.3V
		209	BZX 83 C 3.3V
2D17	8300058	**209**	1N 4148
		215	1N 4148
		217	SFD 184
2D18-19	8300023	**209**	1N 4002
2D20	8300313	**209**	ZPD 15V
		209	BZX 79 B 15V
		209	BZX 83 B 15V
2D21-22/	8300058	**209**	1N 4148
26-29/400		**215**	1N 4148
		217	SFD 184
3D1-4	*8330084		LT 9306 D A
3D5	8330001		CQY 10-5
			CQY 85 L/M
3D6-8	*8330084		LT 9306 D A
3D11-14/	8300058	**209**	1N 4148
16-20/		**215**	1N 4148
23-28/		**217**	SFD 184
30-35			
3D39-41	*8330126		LT 9306 E G/A
5D1-5	8300058	**209**	1N 4148
		215	1N 4148
		217	SFD 184
5D9-16	*8330084		LT 9306 D A
6D1-2	8300023	**209**	1N 4002

LIST OF ELECTRICAL PARTS

Resistors not mentioned are standard 5%, 1/4W carbon film.

0C1	4200540	6800 µF 40V	0R1	5001019	220 Ω 10% 1/2W
0C2	4200540	6800 µF 40V	0R2	5001019	220 Ω 10% 1/2W

0S1	7400254	Switch SPEAKERS 2	0T1	8013308	Mains transformer 2911/12/15/17/19
				8013310	Mains transformer 2913

2919 only

0C3	4010041	10 nF -20+80% 40V
0C4	4010041	10 nF -20+80% 40V
0C5	4010041	10 nF -20+80% 40V
0C6	4010041	10 nF -20+80% 40V

PCB 1 - RF, IF & Stereo Decoder

From serial no. 2930001

8002222 type 2911
8002223 types 2912/15/17
8002224 type 2913
8002184 type 2919

C1	4010060	22 nF -20+80% 40V	C73	4200483	47 µF 16V
C2	4000106	8.2 pF 0.25 pF 250V	C74	4100019	1 nF 2.5% 63V
C3	4200476	0.47 µF 50V	C75	4000170	120 pF 2% 63V
C4	4010027	1 nF 10% 63V	C76	4010061	2.2 nF 10% 63V
C5	4000104	4.7 pF 0.25 pF 63V	C77	4000085	100 pF 2% 63V
C6	4010087	470 pF 10% 63V	C78	4000170	120 pF 2% 63V
C7	4000099	3.3 pF 0.25 pF 63V	C79	4130179	0.1 µF 20% 63V
C8	4010063	4.7 nF 10% 63V	C80	4130179	0.1 µF 20% 63V
C9	4010087	470 pF 10% 63V	C81	4100033	3.3 nF 5% 63V
C10*	4010027	1 nF 10% 63V	C82	4100216	3.9 nF 2.5% 63V
C14	4000105	5.6 pF 0.25 pF 63V	C83	4340003	5.5-65 pF foil
C15	4010063	4.7 nF 10% 63V	C88	4000218	4.7 pF 5% 63V
C16	4000107	68 pF 2% 63V	C89	4130179	0.1 µF 20% 63V
C17*	4000170	120 pF 2% 63V	C90	4340002	2-22 pF foil
C31	4010041	10 nF -20+80% 40V	C91	4130215	0.22 µF 20% 63V
C32	4010041	10 nF -20+80% 40V	C92	4130179	0.1 µF 20% 63V
C33	4010041	10 nF -20+80% 40V	C93	4010041	10 nF -20+80% 40V
C34	4010041	10 nF -20+80% 40V	C94	4010041	10 nF -20+80% 40V
C35	4010041	10 nF -20+80% 40V	C95	4130293	0.47 µF 10% 63V
C36	4010087	470 pF 10% 63V	C96	4200423	2.2 µF 50V
C37	4010041	10 nF -20+80% 40V	C97	4340002	2-22 pF foil
C38	4200431	10 µF 16V	C98	4000110	82 pF 5% 63V
C39	4010041	10 nF -20+80% 40V	C99	4340003	5.5-65 pF foil
C43	4000082	3.9 pF 0.25 pF 63V	C100	4130215	0.22 µF 20% 63V
C44	4000085	100 pF 2% 63V	C101	4130215	0.22 µF 20% 63V
C45	4000085	100 pF 2% 63V	C102	4130215	0.22 µF 20% 63V
C46	4000110	82 pF 5% 63V	C110	4130215	0.22 µF 20% 63V
C48	4010041	10 nF -20+80% 40V	C111	4000159	18 pF 2% 63V (IF = 460 kHz)
C49	4000085	100 pF 2% 63V			
C50	4200129	100 µF 16V	C111	4000026	22 pF 2% 63V (IF = 455 kHz)
C51	4200423	2.2 µF 50V			
C52	4130050	6.8 nF 10% 250V	C112	4100108	180 pF 5% 63V
C56	4130293	0.47 µF 10% 63V	C113	4003125	33 pF 2% 63V
C57	4130215	0.22 µF 20% 63V	C114	4101007	220 pF 5% 63V
C58	4101007	220 pF 5% 63V	C115	4130215	0.22 µF 20% 63V
C62	4010060	22 nF -20+80% 40V	C116	4200480	22 µF 10V
C63	4010041	10 nF -20+80% 40V	C117	4200423	2.2 µF 50V
C64	4010060	22 nF -20+100% 40V	C118	4130220	10 nF 5% 63V
C65	4200487	10 µF 50V	C119	4200477	4.7 µF 25V
C66	4010060	22 nF -20+100% 40V	C120	4130215	0.22 µF 20% 63V
C67	4010060	22 nF -20+100% 40V	C400*	4130220	10 nF 5% 63V
C68	4200493	100 µF 10V bip.	C401	4200423	2.2 µF 50V
C69	4130215	0.22 µF 20% 63V	C402	4100019	1 nF 2.5% 63V
C70	4130215	0.22 µF 20% 63V	C403	4100081	2.15 nF 2.5% 63V
C71	4100216	3.9 nF 2.5% 63V	C404	4100081	2.15 nF 2.5% 63V
C72	4000109	56 pF 2% 63V			

R10	5370061	47 kΩ 20%	R71	5011009	47 Ω 5% 1/2W
R11	5370061	47 kΩ 20%	R72	5011009	47 Ω 5% 1/2W
R12	5370061	47 kΩ 20%	R75	5370058	4.7 kΩ 20%
R13	5370061	47 kΩ 20%	R88	5370150	470 Ω 20%
R31	5020345	47 Ω 10% 1/4W	R91	5370068	22 kΩ 20%
R57	5011009	47 Ω 5% 1/2W	R93	5370058	4.7 kΩ 20%
R58	5011009	47 Ω 5% 1/2W	R100	5370074	10 kΩ 20%
R67	5370074	10 kΩ 20%	R106	5020148	22 Ω 10% 1/4W
R69	5370074	10 kΩ 20%	R120	5011071	1.5 MΩ 5% 1/2W

R123	5011071	1.5 MΩ 5% 1/2W	R400	5010726	4.7 kΩ 2% 1/4W
R145	5011024	680 Ω 5% 1/2W	R401	5010726	4.7 kΩ 2% 1/4W

L1	8020322	Osc. - FM	L12*	8020471	Trap 461 kHz
L2	8020321	RF - FM	L13	8020418	IF - AM
L3	8020320	RF - FM	L14	8020502	1 mH
L4	8020319	RF - FM	L15	8020414	RF - LW
L5	8020341	Aerial transformer	L16	8020416	RF - MW
L6	6850127	1.2 µH	L17	8020417	Osc. - MW
L7	8020323	IF - FM	L18	8020415	Osc. - LW
L10	8020368	Det. - FM	L400	8020142	31 mH
L11	8020369	Det. - FM			

BP1*	8030014	10.7 MHz	BP4	8030025	460 kHz
BP2	8030014	10.7 MHz	BP4	8030056	455 kHz
BP3	8030014	10.7 MHz			

*2913 only**

C400	4130301	15 nF 10% 63V

*2919 only**

C10	4010087	470pF 10% 63V	C21	4200431	10 µF 16V
C11	4000178	12 pF 5% 63V	C22	4010041	10 nF -20+80% 40V
C12	4000178	12 pF 5% 63V	C24	4010041	10 nF -20+80% 40V
C13	4000178	12 pF 5% 63V	C29	4010041	10 nF -20+80% 40V
C17	4130179	0.1 µF 20% 63V	C30	4010060	22 nF -20+80% 40V
C18	4130179	0.1 µF 20% 63V	C53	4010087	470pF 10% 63V
C20	4010063	4.7 nF 10% 63V	C54	4010031	680 pF 10% 63V

R26	5370061	47 kΩ 20%	L12	8020413	1 mH
R28	5370074	10 kΩ 20%			
R41	5370201	47 kΩ 20%	BP1	8030037	10.7 MHz

PCB 1

Before serial no. 2930001

C1	4010060	22 nF -20+80% 40V	C57	4130215	0.22 µF 20% 63V
C2	4000106	8.2 pF 0.25 pF 250V	C58	4101007	220 pF 5% 63V
C3	4130293	0.47 µF 10% 63V	C62	4010060	22 nF -20+80% 40V
C4	4000099	3.3 pF 0.25 pF 63V	C63	4010041	10 nF -20+80% 40V
C5	4010027	1 nF 10% 63V	C64	4010060	22 nF -20+80% 40V
C6	4003125	33 pF 2% 63V	C65	4200487	10 µF 50V
C7	4010087	470 pF 10% 63V	C66	4010060	22 nF -20+80% 40V
C8	4010027	1 nF 10% 63V	C67	4010060	22 nF -20+80% 40V
C9	4010027	1 nF 10% 63V	C68	4200493	100 µF 10V bip.
C10	4000105	5.6 pF 0.25 pF 63V	C69	4130215	0.22 µF 20% 63V
C11	4000016	10 pF 2% 63V	C70	4130215	0.22 µF 20% 63V
C15	4010063	4.7 nF 10% 63V	C71	4100216	3.9 nF 2.5% 63V
C16	4010087	470 pF 10% 63V	C72	4000109	56 pF 2% 63V
C17	4000170	120 pF 2% 63V	C73	4200483	47 µF 16V
C18	4000170	120 pF 2% 63V	C74	4100019	1 nF 2,5% 63V
C19	4000170	120 pF 2% 63V	C75	4000170	120 pF 2% 63V
C20	4010027	1 nF 10% 63V	C76	4010061	2.2 nF 10% 63V
C21	4010027	1 nF 10% 63V	C77	4000085	100 pF 2% 63V
C22	4010027	1 nF 10% 63V	C78	4000170	120 pF 2% 63V
C30	4010060	22 nF -20+80% 40V	C79	4130179	0.1 µF 20% 63V
C31	4010041	10 nF -20+80% 40V	C80	4130179	0.1 µF 20% 63V
C32	4010041	10 nF -20+80% 40V	C81	4100033	3.3 nF 5% 63V
C33	4010041	10 nF -20+80% 40V	C82	4100216	3.9 nF 2.5% 63V
C34	4010041	10 nF -20+80% 40V	C83	4340003	5.5-65 pF foil
C35	4010041	10 nF -20+80% 40V	C88	4000218	10 pF 5% 63V
C36	4010087	470 pF 10% 63V	C89	4130179	0.1 µF 20% 63V
C37	4010041	10 nF -20+80% 40V	C90	4340002	2-22 pF foil
C38	4200431	10 µF 16V	C91	4130215	0.22 µF 20% 63V
C39	4010041	10 nF -20+80% 40V	C92	4130179	0.1 µF 20% 63V
C43	4000082	3.9 pF 0.25 pF 63V	C93	4010041	10 nF -20+80% 40V
C44	4000085	100 pF 2% 63V	C94	4010041	10 nF -20+80% 40V
C45	4000085	100 pF 2% 63V	C95	4130293	0.47 µF 10% 63V
C46	4000110	82 pF 5% 63V	C96	4200423	2.2 µF 50V
C48	4010041	10 nF -20+80% 40V	C97	4340002	2-22 pF foil
C49	4000085	100 pF 2% 63V	C98	4000110	82 pF 5% 63V
C50	4200129	100 µF 16V	C99	4340003	5.5-65 pF foil
C51	4200423	2.2 µF 50V	C100	4130215	0.22 µF 20% 63V
C52	4130050	6.8 nF 10% 250V	C101	4130215	0.22 µF 20% 63V
C56	4130293	0.47 µF 10% 63V	C102	4130215	0.22 µF 20% 63V

C110	4130215	0.22 µF 20% 63V	C117	4200423	2.2 µF 50V
C111	4000159	18 pF 2% 63V	C118	4130220	10 nF 5% 63V
		(IF = 460 kHz)	C119	4200477	4.7 µF 25V
C111	4000026	22 pF 2% 63V	C120	4130215	0.22 µF 20% 63V
		(IF = 455 kHz)	C400	4130220	10 nF 5% 63V
C112	4100108	180 pF 5% 63V	C401	4200423	2.2 µF 50V
C113	4003125	33 pF 2% 63V	C402	4100019	1 nF 2.5% 63V
C114	4101007	220 pF 5% 63V	C403	4100081	2.15 nF 2.5% 63V
C115	4130215	0.22 µF 20% 63V	C404	4100081	2.15 nF 2.5% 63V
C116	4200480	22 µF 10V			

R11	5370061	47 kΩ 20%	R75	5370058	4.7 kΩ 20%
R12	5370061	47 kΩ 20%	R88	5370150	470 Ω 20%
R13	5370061	47 kΩ 20%	R91	5370068	22 kΩ 20%
R57	5011009	47 Ω 5% 1/2W	R93	5370058	4.7 kΩ 20%
R58	5011009	47 Ω 5% 1/2W	R100	5370074	10 kΩ 20%
R67	5370074	10 kΩ 20%	R106	5020148	22 Ω 10% 1/4W
R69	5370074	10 kΩ 20%	R120	5011071	1.5 MΩ 5% 1/2W
R71	5011009	47 Ω 5% 1/2W	R123	5011071	1.5 MΩ 5% 1/2W
R72	5011009	47 Ω 5% 1/2W	R145	5011024	680 Ω 5% 1/2W

L1	8020322	Osc. - FM	L12	8020471	Trap 461 kHz
L2	8020467	RF - FM	L13	8020418	IF - AM
L3	6850127	1.2 µH	L14	8020413	1 mH
L4	8020319	RF - FM	L15	8020414	RF - LW
L5	8020341	Aerial transformer	L16	8020416	RF - MW
L6	8020342	10 µH	L17	8020417	Osc. - MW
L7	8020468	IF - FM	L18	8020415	Osc. - LW
L10	8020368	FM det. I	L400	8020142	31 mH
L11	8020369	FM det. II			

BP1	8030014	10.7 MHz	BP4	8030025	460 kHz
BP2	8030014	10.7 MHz	BP4	8030056	455 kHz
BP3	8030014	10.7 MHz			

FE	6710001	Fe-beads

PCB 2 - 8002187 AF, Power Supply & Control

C1	4201081	10 µF 63V	C42	4010027	1 nF 10% 63V
C2	4130103	0.1 µF 20% 250V	C43	4010027	1 nF 10% 63V
C3	4130103	0.1 µF 20% 250V	C44	4010027	1 nF 10% 63V
C4	4130082	0.22 µF 20% 250V	C45	4010027	1 nF 10% 63V
C5	4130082	0.22 µF 20% 250V	C46	4010027	1 nF 10% 63V
C6	4200128	47 µF 16V	C47	4000175	10 pF 5% 63V
C7	4200406	2200 µF 40V	C48	4000185	22 pF 5% 63V
C8	4010024	470 pF 10% 63V	C49	4010027	1 nF 10% 63V
C9	4200271	47 µF 63V	C50	4010027	1 nF 10% 63V
C10	4010024	470 pF 10% 63V	C51	4130103	0.1 µF 20% 250V
C11	4010024	470 pF 10% 63V	C55	4010027	1 nF 10% 63V
C12	4200426	1 µF 50V	C56	4010027	1 nF 10% 63V
C13	4130082	0.22 µF 20% 250V	C57	4010027	1 nF 10% 63V
C14	4010027	1 nF 10% 63V	C58	4010027	1 nF 10% 63V
C15	4010027	1 nF 10% 63V	C59	4010027	1 nF 10% 63V
C16	4010063	4.7 nF 10% 63V	C60	4010027	1 nF 10% 63V
C17	4130179	0.1 µF 20% 63V	C64	4003128	100 pF 5% 63V
C18	4200859	220 µF 63V	C65	4003128	100 pF 5% 63V
C19	4000173	47 pF 5% 63V	C66	4003128	100 pF 5% 63V
C20	4010024	470 pF 10% 63V	C68	4010027	1 nF 10% 63V
C21	4201081	10 µF 63V	C69	4200423	2.2 µF 50V
C22	4201082	100 µF 40V	C70	4010027	1 nF 10% 63V
C23	4201081	10 µF 63V	C71	4010027	1 nF 10% 63V
C24	4010063	4.7 nF 10% 63V	C72	4010027	1 nF 10% 63V
C25	4010076	22 nF -20+100% 40V	C73	4010027	1 nF 10% 63V
C26	4200478	100 µF 10V	C74	4010076	22 nF -20+100% 40V
C29	4010076	22 nF -20+100% 40V	C90	4010027	1 nF 10% 63V
C30	4200403	100 µF 25V	C91	4010027	1 nF 10% 63V
C31	4200129	100 µF 16V	C92	4010027	1 nF 10% 63V
C32	4200480	22 µF 10V	C93	4010027	1 nF 10% 63V
C33	4200518	22 µF 16V bip.	C94	4010027	1 nF 10% 63V
C34	4200518	22 µF 16V bip.	C400	4200426	1 µF 50V
C35	4130179	0.1 µF 20% 63V	C401	4000018	220 pF 5% 63V
C39	4010027	1 nF 10% 63V	C402	4200478	100 µF 10V
C40	4010027	1 nF 10% 63V	C403	4010024	470 pF 10% 63V
C41	4010027	1 nF 10% 63V	C404	4000015	8.2 pF 0,25 pF 63V

C405	4201087	47 µF 40V	C424	4130233	0.22 µF 20% 63V
C406	4130179	0.1 µF 20% 63V	C425	4130233	0.22 µF 20% 63V
C407	4200477	4.7 µF 25V	C426	4130233	0.22 µF 20% 63V
C408	4130103	0.1 µF 20% 250V	C427	4010021	220 pF 10% 63V
C413	4000173	47 pF 5% 63V	C428	4010021	220 pF 10% 63V
C414	4200423	2.2 µF 50V	C429	4000173	47 pF 5% 63V
C415	4000018	220 pF 5% 63V	C430	4000173	47 pF 5% 63V
C416	4130264	68 nF 10% 63V	C433	4010027	1 nF 10% 63V
C417	4000197	68 pF 5% 63V	C434	4200487	10 µF 50V
C418	4010065	2.7 nF 10% 63V	C435	4200484	10 µF 25V
C419	4130213	10 nF 10% 63V	C436	4200518	22 µF 16V bip.
C423	4130233	0.22 µF 20% 63V	C437	4200423	2.2 µF 50V

R11	5020136	10 Ω 10% 3/4W	R63	5020185	825 Ω 1% 1/4W
R20	5010110	10 kΩ 1% 1/4W	R64	5020097	60.4 kΩ 1% 1/4W
R21	5020116	7.87 kΩ 1% 1/4W	R65	5020097	60.4 kΩ 1% 1/4W
R23	5370058	4.7 kΩ 20%	R85	5020240	24.9 kΩ 1% 1/4W
R31	5020145	8.66 kΩ 1% 1/4W	R86	5020140	49.9 kΩ 1% 1/4W
R32	5020340	8.06 kΩ 1% 1/4W	R87	5020263	100 kΩ 1% 1/4W
R40	5020159	100 Ω 10% 1/4W	R88	5020456	200 kΩ 1% 1/4W
R50	5370068	22 kΩ 20%	R89	5020281	402 kΩ 1% 1/4W
R51	5020235	18.2 kΩ 1% 1/4W	R408	5020657	4.7 Ω 10% 1/3W
R52	5010110	10 kΩ 1% 1/4W	R411	5102016	0.22 Ω 10% 1W
R53	5020340	8.06 kΩ 1% 1/4W	R412	5102016	0.22 Ω 10% 1W
R54	5020097	60.4 kΩ 1% 1/4W	R431	5020595	249 kΩ 1% 1/4W
R55	5020097	60.4 kΩ 1% 1/4W	R432	5020019	36.5 kΩ 1% 1/4W
R56	5020340	8.06 kΩ 1% 1/4W	R442	5370128	100 kΩ 20%
R61	5020185	825 Ω 1% 1/4W			

F1	6600009	2 A-T/250V S IEC 127	RL1	7600069	24 V

L1	8020342	10 µH	L400	6850114	0.5 µH
L2	8020342	10 µH			

X1	8090003	4 MHz

2919 only

C27	4010060	22 nF-20+80% 40V	C83	4000178	12 pF 5% 63V
C80	4000178	12 pF 5% 63V	C84	4000178	12 pF 5% 63V
C81	4000178	12 pF 5% 63V	C413	4000173	100 pF 5% 63V
C82	4000178	12 pF 5% 63V	C415	4010061	2.2 nF 10% 63V

L403	8020342	10 µH
L404	8020476	4.7 mH

PCB 3 - Secondary Control

8002653 FM
8002635 FM-AM

C1	4130224	0.1 µF 10% 63V	C13	4010027	1 nF 10% 63V
C2	4130224	0.1 µF 10% 63V	C400	4130224	0.1 µF 10% 63V
C9	4010027	1 nF 10% 63V	C401	4130227	0.33 µF 10% 63V
C10	4010027	1 nF 10% 63V	C402	4130050	6.8 nF 10% 250V
C11	4010027	1 nF 10% 63V	C403	4130216	22 nF 10% 63V
C12	4010027	1 nF 10% 63V			

R1	5300123	470 kΩ lin.	R26	5320023	2x100 kΩ tuning
R2	5011014	120 Ω 5% 1/2W	R27	5370049	1 MΩ 20%
R12	5300092	100 kΩ preset	R28	5370058	4.7 kΩ 20%
R17	5300092	100 kΩ preset	R40	5370049	1 MΩ 20%
R20	5300092	100 kΩ preset	R402	5310113	2x22 kΩ log.
R23	5300092	100 kΩ preset	R406	5310113	2x22 kΩ log.

P1	7220168	8 pins	S1	7400200	TP 1/TP 2
P2	7220247	7 pins	S2	7400271	STORE
P3	7220177	11 pins	S3	7400200	AUTO/MONO
P4	7220199	12 pins	S5	7400199	LW/MW/FM

PCB 4 - 8002630 Volume Control

2919 only

C1	4000178	12 pF 5% 63V
C2	4000178	12 pF 5% 63V
C3	4000178	12 pF 5% 63V

PCB 5 - 8002629 Volume Display	C1	4010041	10 nF -20+80% 40V
	P5	7220168	8 pins
PCB 6 - 8002627 Fuses Board	C1	4200143	470 µF 6.3V
	F1	6600022	1.6 A-T/250V S IEC127
PCB6 - 8002137 Fuses Board *2913 only*	R1	5020319	3.3 MΩ 1% 1/2W
	F1	6600052	4 A-T

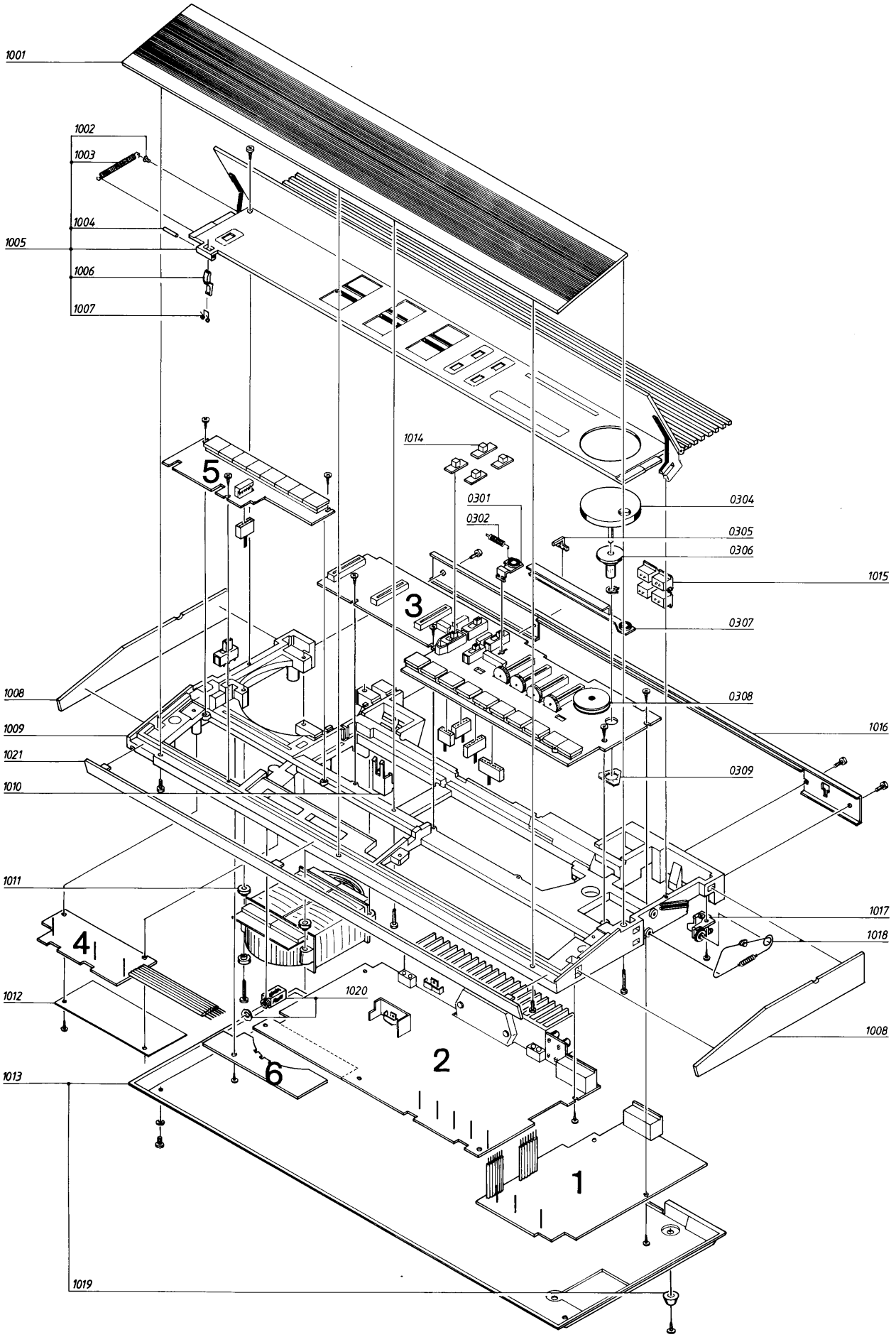
1001
1002
1003
1004
1005
1006
1007
1014
5
0301
0302
0304
0305
0306
1015
3
0307
1008
0308
1009
1016
1021
0309
1010
1011
1017
4
1018
1012
1020
1008
2
6
1013
1
1019

Bang&Olufsen

MEKANISK STYKLISTE

LIST OF MECHANICAL PARTS

01Modul	8002222	PCB - FM 2911	PCB - FM 2911
	8002223	PCB - FM-AM 2912/15/17	PCB - FM-AM 2912/15/17
	8002224	PCB - FM 2913	PCB - FM 2913
	8002184	PCB - FM 2919	PCB - FM 2919
	7210416	Antennestikdåsepanel	Aerial socket panel
	7500177	Kontakstift	Contact pin
02Modul	8002187	PCB - LF og spændings-forsyning	PCB - AF and power supply
	2568793	Køleplade 2IC1	Heat sink 2IC1
	2819157	Fjeder 2TR4	Spring 2TR4
	3170001	Glimmerskive 2TR4	Mica sheet 2TR4
	3170212	Isolationsstykke 2IC6	Insulator 2IC6
	3302378	Skærm øvre 2IC6	Screen upper 2IC6
	3302379	Skærm nedre 2IC6	Screen lower 2IC6
	3358188	Køleplade 2TR10	Heat sink 2TR10
	2816195	Fjeder 2TR10	Spring 2TR10
	7219038	Stikdåsepanel TP2	Socket panel TP2
	7210418	Stikdåse 7-pol. PH/TP1	Socket 7-pol. PH/TP1
	7500177	Kontakstift	Contact pin
	7500002	Sikringsholder	Holder f/fuse
03Modul	8002653	PCB - Sekundær betjening 2911/13/19 (FM)	PCB - Secondary control 2911/13/19 (FM)
	8002635	PCB - Sekundær betj. 2912/15/17 (FM-AM)	PCB - Secondary control 2912/15/17 (FM-AM)
0301	2548118	Vinkel	Bracket
0302	2810074	Fjeder	Spring
0304	2794061	Skalahjul	Dial drive
0305	3190061	Viser	Dial pointer
0306	2905066	Leje	Bearing
0307	2548119	Vinkel	Bracket
0308	2794000	Hjul 3R26	Wheel 3R26
	2395044	Låsering f/hjul	Locking ring f/wheel
0309	2395035	Låsering	Retaining ring
	3152383	Holder f/LED's	Holder f/LED's
	3152390	Hus 3S2	3S2 housing
	2812081	Fjeder 3S2	Spring 3S2
	3955034	Skalasnor	Dial cord
04Modul	8002630	PCB - Volume betj.	PCB - Volume control
	7500177	Kontakstift	Contact pin
05Modul	8002629	PCB - Volume display	PCB - Volume display
	3152383	Holder f/LED's	Holder f/LED's
06Modul	8002627	PCB - Sikringer 2911/12/15/17/19	PCB - Fuses 2911/12/15/17/19
	8002137	PCB - Sikringer 2913	PCB - Fuses 2913
	7500002	Sikringsholder	Holder f/fuse
1001	3168271	Primær betjeningspanel	Panel primary control
1002	2365005	Hulnitte	Rivet
1003	2810144	Fjeder	Spring
1004	2830071	Stift	Pin
1005	3458157	Sekundær betjeningspanel FM	Panel secondary control FM
	3458299	Sekundær betjeningspanel FM-AM	Panel secondary control FM-AM
1006	2852045	Arm	Lever
1007	2819196	Fjeder	Spring
1008	3414345	Kabinet sidestykker, hvid	Cabinet sides, white
	3414347	Kabinet sidestykker, metalgrå	Cabinet sides, grey metallic
1009	3114223	Chassis	Chassis
1010	3152188	Holder	Holder
	3152223	Holder (2915)	Holder (2915)
1011	2938154	Bøsning	Bushing
1012	3302078	Skærm	Screen
1013	3112281	Bund	Bottom
	2938213	Bøsning PHONES	Bushing PHONES
	3103066	Fod/afstandsstykke	Foot/spacer
1014	2775941	Knap	Knob

1015	7211047	Højttalerstikdåse	Speaker socket
1016	3452000	Bagstykke 2911	Rear panel 2911
	3452444	Bagstykke 2912	Rear panel 2912
	3452199	Bagstykke 2913	Rear panel 2913
	3452454	Bagstykke 2915	Rear panel 2915
	3452455	Bagstykke 2917	Rear panel 2917
	3452447	Bagstykke 2919	Rear panel 2919
1017	3011000	Dæmper f/låg	Damper f/lid
1018	3955034	Snor	String (dial cord)
	2810098	Fjeder	Spring
	3035034	Styr f/lågarm	Guide f/lid lever
1019	3035028	Gummifod	Rubber foot
1020	7210023	Jack-stikdåse	Jack socket
1021	3414340	Kabinet forstykke	Cabinet front

Ikke viste dele

Parts Not Shown

3532161	Diagramhæfte	Diagram folder
3397405	Skumemballage	Foam packing
3917077	Skumfolie 900x400 mm	Foam wrapping 900x400 mm
3391461	Yderæske	Outer carton
2938180	Bøsning, køleplade	Bushing, heat sink
6271115	Netledning 2911/12/17/19	Mains cord 2911/12/17/19
6270251	Netledning 2913	Mains cord 2913
6271091	Netledning 2915	Mains cord 2915

Outlines / Metric Dimensions										
2.2 x 6.5 self tapping				2011304						
2.9 x 4.5 self tapping		2013098								
2.9 x 9.5 self tapping	2013104									
2.9 x 16 self tapping	2013106									
AM3 x 5	2039020									
AM3 x 6	2039008									
AM3 x 8	2039028									
AM3 x 10	2039908									
AM3 x 12	2039034									
AM3 x 25	2039011									
AM3 x 28	2039909									
M3					2380011	2380054				
3									2390004	
3.2							2624032	2622041		2625002
3.2 fibre								2622052		
3.5 x 6.5 self tapping		2015090								
3.5 x 9.5 self tapping		2015091								
3.5 x 32 self tapping			2015072							

5-1

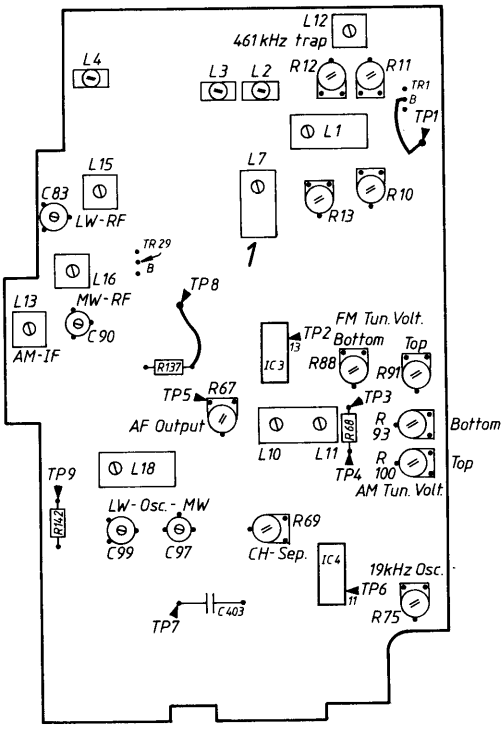
L12
461 kHz trap
L4
L3
L2
R12
R11
TR1
B
TP1
L1
L15
L7
C83
LW-RF
R13
R10
TR29
B
1
L16
TP8
L13
MW-RF
C90
AM-IF
FM Tun. Volt.
TP2
Bottom
Top
IC3
R88
R91
R137
TP5
R67
TP3
AF Output
R68
R 93
Bottom
L10
L11
R 100
Top
TP4
AM Tun. Volt.
TP9
L18
R142
LW-Osc.-MW
R69
C99
C97
CH-Sep.
IC4
19kHz Osc.
TP6
R75
C403
TP7

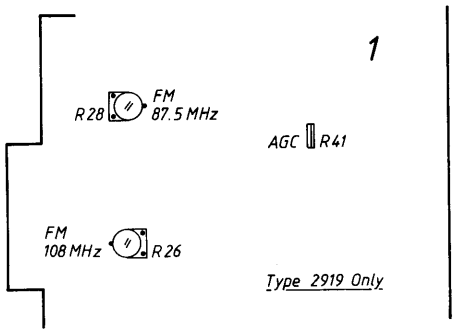
1
R28
FM
87.5 MHz
AGC
R41
FM
108 MHz
R26
Type 2919 Only

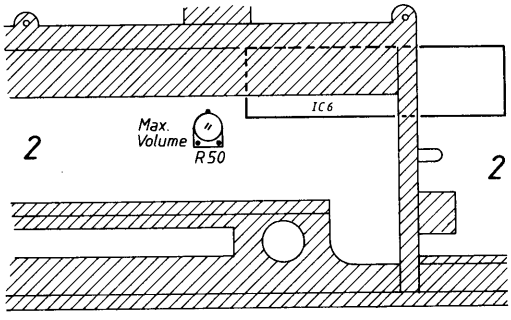
IC6
2
Max.
Volume
R50
2

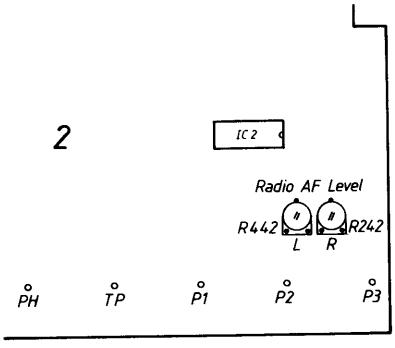
2
IC2
Radio AF Level
R442
R242
L
R
PH
TP
P1
P2
P3

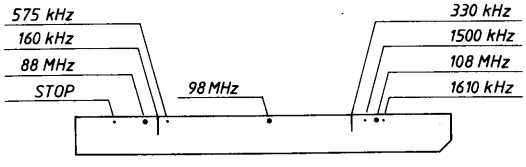
575 kHz
160 kHz
88 MHz
STOP
98 MHz
330 kHz
1500 kHz
108 MHz
1610 kHz

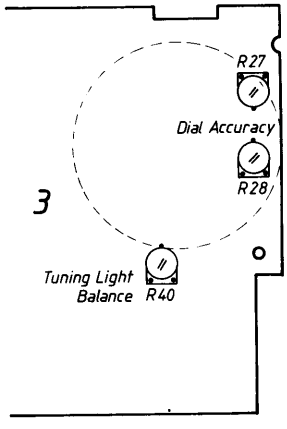
R27
Dial Accuracy
R28
3
Tuning Light
Balance
R40

JUSTERINGER

I de efterfølgende justeringer henvises der til nogle testpunkter (TP). Det kan oplyses, at i et antal producerede modtagere er testpunkterne ikke vist på printpladernes komponenttryk.

Volume

Tonegenerator tilsluttes TAPE 2 og indstilles til at afgive 1 kHz 40 mV.

Balancekontrol stilles i midterstilling (kontrolleres med AC voltmeter).

Wattmeter eller AC voltmeter tilsluttes højttalerudgangen.

Volume kontrol reguleres i maksimum.

Med 2R50 justeres indtil der måles 2,8V på højttalerudgangen.

HF justeringer

AUTO-MONO omskifteren skal stå i MONO hvis andet ikke er nævnt.

Skalabaggrunden er forsynet med opmærkning af de mest benyttede justeringsfrekvenser. Ved indstilling af skalaen skal skalaviseren stå over mærkningen til den pågældende frekvens.

FM JUSTERINGER

Båndbegrænser (kun type 2919)

Inden justering af afstemningsspænding, tuner/MF og skalapasning i type 2919, skal 1R26 drejes med uret til stop og 1R28 drejes mod uret til stop set fra printpladens kobberside.

Afstemningsspænding

Top

1. 3R27 & 3R28 drejes med uret til ca. 1/3 af drejning (set fra oversiden.
2. DC voltmeter tilsluttes 1TP1.
3. P5, FM aktiveres og skala drejes op til mekanisk stop.
4. 1R91 justeres til der måles 20V i 1TP1.

Bund

5. Skala drejes til mekanisk stop.
6. 1R88 justeres til der måles 3,6V i 1TP1.

ADJUSTMENTS

In the following adjustments references are made to some test points (TP). It is pointed out that in a number of receivers manufactured these test points are not shown on the component print of the PC-Boards.

Volume

Connect an audio oscillator to TAPE 2 and set it to yield 1 kHz 40 mV.

Set the balance control in its mid-position (checkable by means of an AC voltmeter).

Connect a wattmeter or AC voltmeter to the loudspeaker output.

Regulate the volume control in maximum.

Adjust with 2R50 until a reading of 2.8V is obtained in the loudspeaker output.

RF Adjustments

The AUTO-MONO switch must be set in MONO if not otherwise indicated.

The dial background is provided with markings indicating the most frequently used adjustment frequencies. When setting the dial, the dial pointer shall be opposite the marking of the frequency in question.

FM ADJUSTMENTS

Band Limiter (type 2919 only)

Prior to adjusting the tuning voltage, tuner/IF and dial calibration of type 2919, 1R26 must be turned clockwise until its stop and 1R28 must be turned counter-clockwise until its stop as seen from the copper side of the PC-Board.

Tuning Voltage

Top

1. Turn 3R27 & 3R28 clockwise until approx. 1/3 of its travel (as seen from the top side).
2. Connect a DC voltmeter to 1TP1.
3. Activate P5 FM and turn the dial up until its mechanical stop.
4. Adjust 1R91 until a reading of 20V is obtained in 1TP1.

Bottom

5. Turn the dial down until its mechanical stop.
6. Adjust 1R88 until a reading of 3.6V is obtained in 1TP1.

Tuner/MF

1. Sweepgenerator tilsluttes antenneindgangen og indstilles til 87,5 MHz.
2. Oscilloskop tilsluttes 1TP2.
3. P5 skala indstilles til der måles 3,7V i 1TP1.
4. 1L1, 1L2, 1L3, 1L4 & 1L7 justeres til maksimum og symmetrisk MF kurve.
5. P5 skala indstilles til der måles 19,5V i 1TP1.
6. Sweepgenerator instilles til 108 MHz.
7. 1R10, 1R11, 1R12 & 1R13 justeres til maksimum og symmetrisk MF kurve.
8. Gentag evt. punkt 3 til 7.

Skalapasning

1. P5 skala indstilles til der måles 19,5V i 1TP1.
2. Skalaviser flyttes hen over 108 MHz mærket på skalabaggrunden.
3. Sweepgenerator indstilles til 88 MHz.
4. P5 skalaviser stilles over 88 MHz mærket.
5. 1R88 justeres til skalapasning.
6. Sweepgenerator indstilles til 98 MHz.
7. P5 skalaviser stilles over 98 MHz mærket.
8. 3R27 justeres til skalapasning.
9. Gentag evt. punkt 3 til 8.

Båndgrænser (kun type 2919)

Sweepgenerator indstilles på 108 MHz.

P5 skalaviser stilles over 108 MHz mærket.

1R26 justeres indtil MF kurven netop flytter sig på oscilloskopet.

Sweepgeneratoren indstilles til 87,5 MHz.

P5 skala indstilles til 87,5 MHz (højre side af skalaviseren skal flugte med venstre side af 88 MHz mærket).

1R28 justeres til MF kurven netop flytter sig på oscilloskopet.

Tuner/IF

1. Connect a sweep generator to the aerial input and set it to 87.5 MHz.
2. Connect an oscilloscope to 1TP2.
3. Adjust the P5 dial until a reading of 3.7V is obtained in 1TP1.
4. Adjust 1L1, 1L2, 1L3, 1L4 & 1L7 until maximum and symmetrical IF curve is obtained.
5. Adjust P5 dial until a reading of 19.5V is obtained in 1TP1.
6. Set the sweep generator at 108 MHz.
7. Adjust 1R10, 1R11, 1R12 & 1R13 until maximum and symmetrical IF curve is obtained.
8. If necessary, repeat the poits 3 to 7.

Dial Calibration

1. Adjust the P5 dial until a reading of 19.5V is obtained in 1TP1.
2. Move the dial pointer until it is opposite the 108 MHz mark on the dial background.
3. Set the sweep generator to 88 MHz.
4. Set the P5 dial pointer over the 88 MHz mark.
5. Adjust 1R88 to dial calibration.
6. Set the sweep generator to 98 MHz.
7. Set the P5 dial pointer over the 98 MHz mark.
8. Adjust 3R27 to dial calibration.
9. If necessary, repeat the points 3 to 8.

Band Limiter (type 2919 only)

Set the sweep generator to 108 MHz.

Set the P5 dial pointer over 108 MHz.

Adjust 1R26 until the IF curve on the oscilloscope just starts to move.

Set the sweep generator to 87.5 MHz.

Set the P5 dial to 87.5 MHz (the right-hand side of the dial pointer shall be in line with the left-hand side of the 88 MHz mark).

Adjust 1R28 until the IF curve on the oscilloscope just starts to move.

Detektor

For at der kan foretages en korrekt justering af detektoren, skal der bl.a. anvendes et forvrængningsmeter som beskrevet i punkt 1. Hvis et forvrængningsmeter ikke er tilgængeligt, kan der foretages en tilnærmet justering som beskrevet i punkt 2.

1. Modtageren indstilles på f.eks. 94 MHz.

   En kombineret målesender og sweepgenerator tilsluttes antenneindgangen, og indstilles til at afgive 1 mV, Δ ±75 kHz.

   Oscilloskop tilsluttes i 1TP2.

   Målesenderens frekvens indstilles til 94 MHz, og finindstilles til minimum 2. harmonisk af signalet (se fig.).

   Et forvrængningsmeter tilsluttes højttalerudgangen.

   Et DC voltmeter tilsluttes imellem 1TP3 & 1TP4.

   Med 1L11 justeres, indtil der måles minimum forvrængning. Derefter justeres med 1L10, indtil der måles 0V.

   Gentag begge justeringer, indtil de er i orden.

Detector

Equipment needed to enable correct adjustment of the detector includes a distortion meter as explained in point 1. Should a distortion meter not be at hand it is possible to make an approximated adjustment as explained in point 2.

1. Set the receiver at, say, 94 MHz.

   Connect a combination signal generator/sweep generator to the aerial input and set it to yield 1 mV EMF, Δ ±75 kHz.

   Connect an oscilloscope to 1TP2.

   Set the signal generator frequency at 94 MHz and trim it to minimum the 2nd harmonic of the signal (see fig.).

   Connect a distortion meter to the loudspeaker output.

   Connect a DC voltmeter between 1TP3 & 1TP4.

   Adjust with 1L11 until minimum distortion is obtained. Next, adjust with 1L10 until a reading of 0V is obtained.

   Repeat both these adjustments until they are OK.

RIGTIG

CORRECT

FORKERT

INCORRECT

2. Justeringen foretages ved hjælp af »S-kurve«; men der vil være usikkerhed for, hvorvidt modtageren overholder sine forvrængningsdata.

   Modtageren indstilles på f.eks. 94 MHz.

   En kombineret målesender og sweepgenerator tilsluttes antenneindgangen, og indstilles til at afgive 1 mV EMF, Δ ±75 kHz.

   Oscilloskopet tilsluttes i 1TP2.

   Målesenderens frekvens indstilles til 94 MHz, og finindstilles til minimum 2. harmonisk af signalet. (se fig.).

   Generatoren indstilles til sweep.

   Et oscilloskop tilsluttes 1TP5 og et DC voltmeter tilsluttes mellem 1TP3 & 1TP4.

   Med 1L10 & 1L11 justeres til maksimum og symmetrisk S-kurve.

   Derefter justeres med 1L10 indtil der måles 0V.

2. Make the adjustments by means of a »S-curve«, but it will be uncertain whether the receiver maintains its distortion specifications.

   Set the receiver at, say, 94 MHz.

   Connect a combination signal generator/sweep generator to the aerial input and set it to yield 1 mV EMF, Δ ±75 kHz.

   Connect an oscilloscope to 1TP2.

   Set the signal generator frequency at 94 MHz and trim it to minimum the 2nd harmonic of the signal (see fig.).

   Set the generator to sweep.

   Connect an oscilloscope to 1TP5 and connect a DC voltmeter between 1TP3 & 1TP4.

   Adjust with 1L10 & 1L11 to maximum and symmetrical S-curve.

   Next, adjust with 1L10 until a reading of 0V is obtained.

Balancelys

Skalaen indstilles til 0V mellem 1TP3 & 1TP4.

3R40 justeres indtil 3D40 & 3D41 lyser lige kraftigt.

LF output

En målesender tilsluttes antenneindgangen. Den indstilles på f.eks. 94 MHz og til at afgive 1 mV EMF, Δ ±75 kHz.

Modtageren indstilles på samme frekvens som målesenderen.

AC voltmeter tilsluttes 1TP7, og 1R67 justeres til 575 mV.

Med 2R242 & 2R442 kan justeres til radio LF niveau efter kundens ønske. 2R242 & 2R442 er fra fabrikken justeres til maksimum output. De er tilgængelige fra bunden.

AGC (kun type 2919)

En målesender tilsluttes antenneindgangen, og indstilles til at afgive f.eks. 94 MHz 500 μV EMF Δ ±75 kHz.

Modtageren indstilles på samme frekvens som målesenderen.

DC voltmeter tilsluttes 1IC3 ben 15, og 1R41 justeres til der måles 4V.

Stereodekoder

For at denne justering kan foretages korrekt, skal der anvendes en frekvenstæller eller Bang & Olufsen voltmeter RV11 og frekvens probe PF5 som beskrevet i punkt 1. Hvis omtalte instrumenter ikke er tilgængelige, kan der foretages en tilnærmet justering som beskrevet i punkt 2.

1. Indstil modtageren på en mono station (omskifter i stilling FM AUTO).

   En frekvenstæller (eller RV11/PF5) tilsluttes 1TP6.

   Med 1R75 justeres, indtil der måles 19 kHz ±50 kHz.

2. Indstil modtageren på en stereo station.

   Potentiometeret 1R75 drejes imod uret (set fra komponentsiden), indtil stereovirkningen lige netop ophører. Derefter drejes 1R75 med uret, indtil stereovirkningen lige netop ophører.

   Indstil nu 1R75 midt mellem de to stillinger, og der er opnået en tilnærmelsesvis korrekt justering.

Balance Lights

Adjust the dial to 0V between 1TP3 & 1TP4.

Adjust 3R40 until 3D40 & 3D41 glow with identical strength.

AF Output

Connect a signal generator to the aerial input and set it to, say, 94 MHz and to yield 1 mV EMF, Δ ±75 kHz.

Set the receiver to the same frequency as the signal generator.

Connect an AC voltmeter to 1TP7 and adjust 1R67 to 575 mV.

It it possible by means of 2R242 & 2R442, to adjust to radio AF level as the customer may wish. Both 2R242 & 2R442 are factory-adjusted for maximum output. They are accessible through the bottom plate.

AGC (type 2919 only)

Connect a signal generator to the aerial input and set it to, say, 94 MHz and to yield 500 μV EMF, Δ ±75 kHz.

Set the receiver to the same frequency as the signal generator.

Connect a DC voltmeter to pin 15 of 1IC3, and adjust 1R41 until a reading of 4V is obtained.

Stereo Decoder

In order to make this adjustment correctly a frequency counter or a Bang & Olufsen Voltmeter RV11 and a Frequency Probe PF5 should be used, as explained in point 1. Should these instruments not be at hand, a fairly good adjustment is possible by following the procedures described in point 2.

1. Tune the receiver to a mono transmitter (switch in FM AUTO mode).

   Connect a frequency counter (or RV11/PF5) to 1TP6.

   Adjust with 1R75 until a reading of 19 kHz ±50 kHz.

2. Tune the receiver to a stereo transmitter.

   Turn the potentiometer 1R75 counter-clockwise (as seen from the component side) until the stereo effect just ceases to be heard. Next turn 1R75 clockwise until the stereo effect just ceases to be heard.

   Now adjust 1R75 in the middle between the two positions, and a fairly correct adjustment has been achieved.

En stereokoder (encoder) tilsluttes antenneindgangen.

Et wattmeter eller et AC voltmeter tilsluttes højttaler-udgangen.

Med potentiometeret 1R69 justeres, til der opnås miminum signal i umoduleret kanal.

1L200 & 1L400 må ikke justeres.

AM JUSTERINGER

NB: *Der må ikke justeres i MW oscillatorespolen 1L17.*

Anvend svagest mulige signaler under justeringsarbejdet.

Topspænding, osc. & antennekredse

MW

1. AM målesender tilsluttes antenneindgangen og indstilles til at afgive 1610 kHz, modulation 30% - 400 Hz eller 1 kHz.
2. MW aktiveres og skalaviseren stilles over 1610 kHz mærket.
3. DC voltmeter tilsluttes 1TP8.
4. 1R100 justeres til der måles 25V.
5. Wattmeter tilsluttes LF udgangen, eller AC voltmeter tilsluttes 1TP7.
6. Med 1C97 justeres indtil modtageren ligger midt på målesenderfrekvensen.
7. Målesenderens og modtagerens frekvens ændres til 1500 kHz.
8. 1C90 justeres til maksimum output.
9. Målesenderens og modtagerens frekvens ændres til 575 kHz.
10. 1R93 justeres indtil modtageren ligger midt på målesenderfrekvensen.
11. 1L16 justeres til maksimum output.
12. Gentag evt. punkt 7 til 11.

LW

13. LW aktiveres, målesenderen og modtageren indstilles på 330 kHz.
14. Med 1C99 justeres indtil modtageren ligger midt på målesenderfrekvensen.
15. 1C83 justeres til maksimum output.
16. Målesenderens og modtagerens frekvens ændres til 160 kHz.

Connect a stereo coder (encoder) to the aerial input.

Connect a wattmeter or a voltmeter to the loud-speaker output.

Adjust with the potentiometer 1R69 until a minimum signal is obtained in non-modulated channel.

1L200 & 1L400 must not be adjusted

AM ADJUSTMENTS

NOTE! *It is not allowable to make adjustments in the MW oscillator coil 1L17.*

Always use signals as weak as possible during adjustments.

Top Voltage, Osc. & Aerial Circuits

MW

1. Connect an AM signal generator to the aerial input and set it to yield 1610 kHz, modulation 30% - 400 kHz or 1 kHz.
2. Activate MW and set the dial pointer over the 1610 kHz mark.
3. Connect a DC voltmeter to 1TP8.
4. Adjust 1R100 until a reading of 25V is obtained.
5. Connect a wattmeter to the AF output, or connect an AC voltmeter to 1TP7.
6. Adjust with 1C97 until the receiver lies centrally on the frequency of the generator.
7. Alter the frequencies of the signal generator and the receiver to 1500 kHz.
8. Adjust 1C90 to maximum.
9. Alter the frequencies of the signal generator and the receiver to 575 kHz.
10. Adjust 1R93 until the receiver lies centrally on the frequency of the generator.
11. Adjust 1L16 to maximum output.
12. If necessary, repeat the points 7 to 11.

LW

13. Activate LW and adjust the frequencies of the signal generator and the receiver to 330 kHz.
14. Adjust with 1C99 until the receiver lies centrally on the frequency of the generator.
15. Adjust 1C83 to maximum output.
16. Alter the frequencies of the signal generator and the receiver to 160 kHz.

17. Med 1L18 justeres indtil modtageren ligger midt på målesenderfrekvensen.
18. 1L15 justeres til maksimum output.
19. Gentag evt. punkt 13 til 18.
20. Det kontrolleres at skalaen dækker båndgrænserne både på MW & LW.

MF

En sweepgenerator tilsluttes antenneindgangen, og indstilles til centerfrekvens *455 kHz Δ10 kHz.

Basis på 1TR29 kortsluttes til stel.

MW aktiveres og modtageren indstilles på 1500 kHz.

1L12 forstemmes ved at dreje kernen ud.

Oscilloskop tilsluttes 1TP9.

1L13 justeres til maksimum og symmetrisk MF kurve.

Sweepgeneratorens frekvens ændres til 461 kHz.

1L12 justeres til minimum MF kurve.

Kortslutningen på basis af 1TR29 fjernes.

*I nogle apparater er båndpasfilteret 1BP4 på 460 kHz. I disse modtagere skal AM mellemfrekvensen justeres med centerfrekvensen 460 kHz.

17. Adjust with 1L18 until the receiver lies centrally on the frequency of the generator.
18. Adjust 1L15 to maximum output.
19. If necessary, repeat the points 13 to 18.
20. Check that the dial covers the band limits of both MW & LW.

IF

Connect a sweep generator to the aerial input and set it to centre frequency of *455 kHz Δ10 kHz.

Make a jumper between the base of 1TR29 and the chassis.

Activate MW and set the receiver to 1500 kHz.

Detune 1L12 by turning its core out.

Connect an oscilloscope to 1TP9.

Adjust 1L14 to maximum and symmetrical IF curve.

Alter the frequency of the sweep generator to 461 kHz.

Adjust 1L12 to minimum IF curve.

Remove the jumper from the base of 1TR29.

*In some receivers the bandpass filter 1BP4 is at 460 kHz. In these receivers the AM intermediate frequency must be adjusted with the centre frequency 460 kHz.

TECHNICAL SPECIFICATIONS
Amplifier section

Power output RMS DIN/IEC	2 x 30W/8 Ω
Power output music	2 x 40W/8 Ω
Harmonic distortion DIN/IEC	< 0.08%
Following measurements	IHF A-202
Power output 20 - 20,000 Hz	2 x 25W/8 Ω
Total harmonic distortion	< 0.1%
Dynamic headroom	1.6 dB/8 Ω
Intermodulation	< 0.1%
Response vs frequency PHONO	20 - 20,000 Hz ±1.5 dB
Response vs frequency TAPE	20 - 20,000 Hz ±1.5 dB
Wideband damping factor	35
Input sensitivity/impedance PHONO	0.45 mV/47 kΩ
Input sensitivity/impedance TAPE	45 mV/150 kΩ
Overload level PHONO	50 mV
Overload level TAPE	3 V
Signal-to-noise ratio A-weighted	
PHONO	> 75 dB
Signal-to-noise ratio A-weighted TAPE	> 77 dB
Channel separation	40 dB
Output TAPE	500 mV/1 kΩ
Output Headphones	Max. 12V/220 Ω
BASS control at 40 Hz	±10 dB
TREBLE control at 12,500 Hz	±10 dB

FM Tuner Section
Types 2911/12/13/13/15/17

Standard for measurements (RF)	IHF T-200
FM range	87.5 - 108 MHz
FM aerial impedance	75/240 Ω
Usable sensitivity mono	15 dBf - 1.6 μV/75 Ω
Usable sensitivity stereo	20 dBf - 2.8 μV/75 Ω
50 dB quieting sensitivity mono	21 dBf - 3.2 μV/75 Ω
50 dB quieting sensitivity stereo	42 dBf - 35 μV/75 Ω
Signal-to-noise ratio at 65 dBf mono	> 72 dB
Signal-to-noise ratio at 65 dBf stereo	> 67 dB
Frequency response	20 - 15,000 Hz ±1.8 dB
Distortion at 65 dBf mono	< 0.3%
Distortion at 65 dBf stereo	< 0.35%
Intermodulation distortion mono	< 0.05%
Intermodulation distortion stereo	< 0.25%
Capture ratio	< 1.7 dB
Adjacent channel selectivity	> 5 dB
Alternate channel selectivity	> 60 dB
Spurious response	> 110 dB
Image response ratio	> 75 dB
IF response ratio	> 110 dB
AM suppression	> 55 dB
Stereo channel separation	> 36 dB
Subcarrier product rejection	> 55 dB

Type 2919 only

Standard for measurements (RF)	IHF T-200
FM range	87.5 - 108 MHz
FM aerial impedance	75/240 Ω
Usable sensitivity mono	20 dBf - 2.8 μV/75 Ω
Usable sensitivity stereo	26 dBf - 6 μV/75 Ω
50 dB quieting sensitivity mono	25 dBf - 5 μV/75 Ω
50 dB quieting sensitivity stereo	45 dBf - 50 μV/75 Ω
Signal-to-noise ratio at 65 dBf mono	> 72 dB
Signal-to-noise ratio at 65 dBf stereo	> 67 dB

Frequency response	30 - 15,000 Hz ±1.8 dB
Distortion at 65 dBf mono	< 0.3%
Distortion at 65 dBf stereo	< 0.35%
Intermodulation distortion mono	< 0.05%
Intermodulation distortion stereo	< 0.25%
Capture ratio	< 1.7 dB
Adjacent channel selectivity	> 5 dB
Alternate channel selectivity	> 60 dB
Spurious response	> 110 dB
Image response ratio	> 85 dB
IF response ratio	>.115 dB
AM suppression	> 55 dB
Stereo channel separation 1 kHz	> 36 dB
Subcarrier product rejection	> 55 dB

AM Tuner Section
Types 2912/15/17

LW range	150 - 350 kHz
MW range	520 - 1610 kHz
LW sensitivity 20 dB S/N ratio	120 µV
MW sensitivity 20 dB S/N ratio	100 µV

Other Data

Power supply	2911/17/19: 220V
	2912/15: 240V
	2913: 120V
Power frequency	50/60 Hz
Power consumption	20 - 170W
Dimensions W x H x D	62 x 7 x 25 cm (24½" x 2¾" x 10")
Weight	7 kg (15.4 lbs)

Subject to change without notice

ADSKILLELSE

Bund

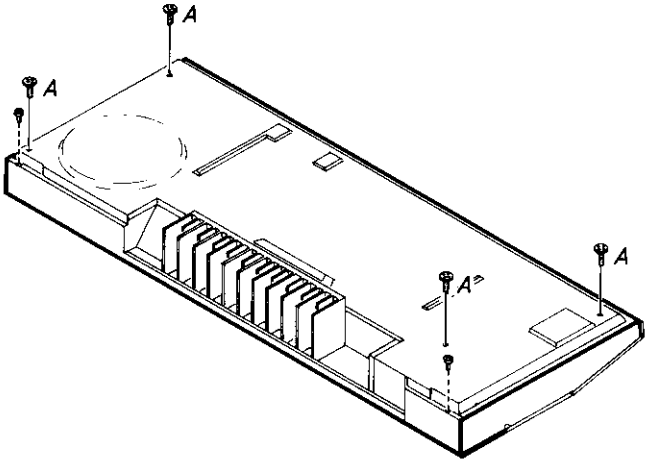

Afmonter de fire skruer (A).

Løft bunden i forkanten og træk den fri af bagpladen.

Ved samling skal det påses, at bundens bagkant kommer ind under bagpladen.

Specielt for type 2919
I denne type er der yderligere to skruer i bunden, der skal afmonteres. Det kan ligeledes være nødvendigt, at frigøre stelledningen mellem nettransformatoren og bundpladen.

Toppanel med låg

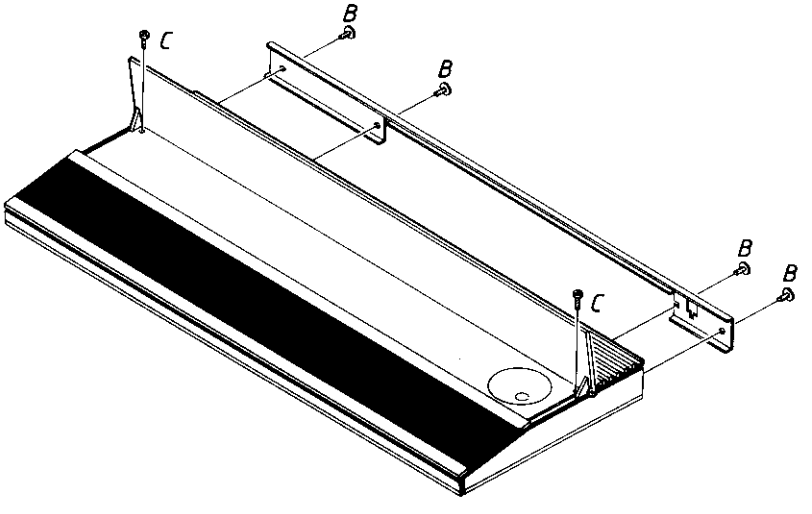

Bagpladen afmonteres ved hjælp af de fire skruer (B).

Afmonter de to skruer (C). Toppanelet kan nu frigøres ved at løfte i dets bagkant og trække bagud.

DISMANTLING

Bottom

Remove the four screws (A).

Lift the bottom at the front edge and pull it free off the rear plate.

On re-assembly, observe that the rear edge of the bottom sits under the rear plate.

Type 2919 Only
In this type are two additional bottom screws to be removed. Furthermore, it may be necessary to release the chassis wire between the mains transformer and the bottom plate.

Top Panel with Lid

Remove the rear plate by unscrewing the four screws (B).

Remove the two screws (C). The top panel can now be released by lifting at its rear edge and pulling rearwards.

Ved samling kontrolleres det, at alle knapper er påsatte. Det kontrolleres ligeledes at tonekontrol-skydere og friktionsarm for låg er i indgreb.

On-reassembly, check that all buttons are fitted. Also check that the tone control slides and the friction arm for the lid are meshing.

Betjeningspanel

Control Panel

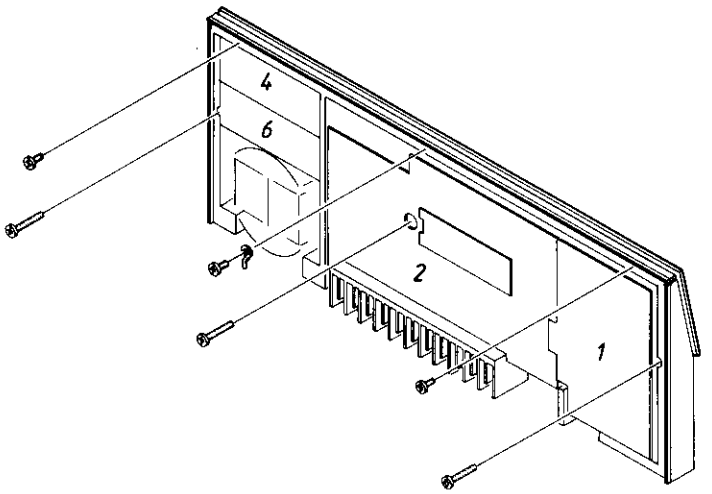

Bund og toppanel afmonteres.

De seks viste skruer skrues ud. Betjeningspanelet kan nu fjernes.

Pas på ikke at ødelægge kontaktfjedrene.

Kontroller ved samling at alle kontaktfjedre er indgreb med stifterne på printpladerne.

Remove the bottom and the top panel.

Unscrew the six screws indicated. The control panel is now removable.

Take care not to destroy the contact springs.

On re-assembly, check that all contact springs are in contact with the PCB-pins.

Servicestilling PCB 3

Servicing Position for PCB 3

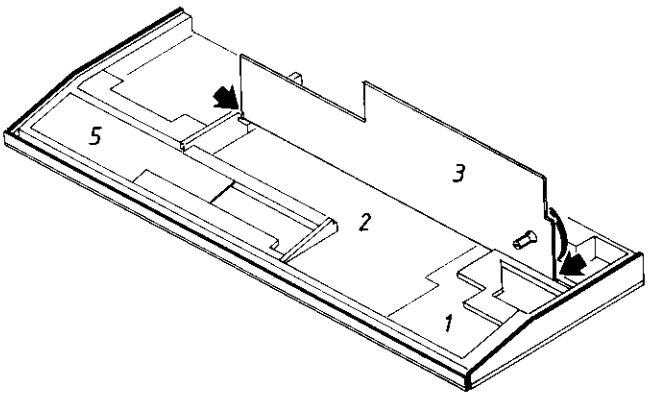

Ved servicering kan printplade 3 anbringes i de to viste riller.

During servicing PCB 3 can be placed in the two slits indicated.

Bang&Olufsen

SERVICETIPS

SERVICE TIPS

Ledningsmontering på nettransformator
Anvend dobbeltisoleret ledning til forbindelserne.

Wiring of Mains Transformer
Use double insulated wires for the connections.

220V
(type 2911/17/19)

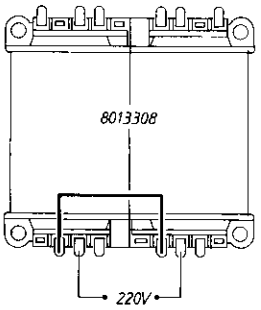

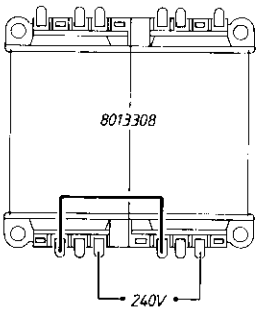

240V
(type 2912/15)

6F1 6600022 T-1.6 A Slow (250 V - IEC 127)

110V

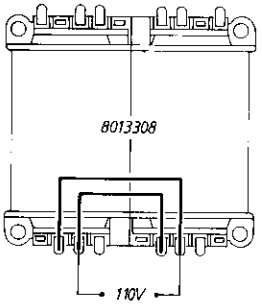

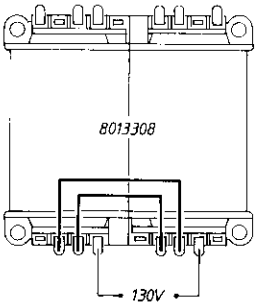

130V

6F1 6600010 T-4 A Slow (250 V - IEC 127)

120V
(type 2913)

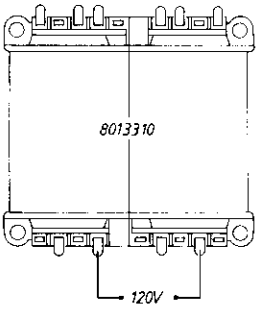

6F1 6600052 T-4 A Slow (UL)

Anvend dobbeltisoleret ledning til forbindelserne.

Use double insulated wires for the connections.

Snoretræk for programlåg

Drive System for Programming Cover

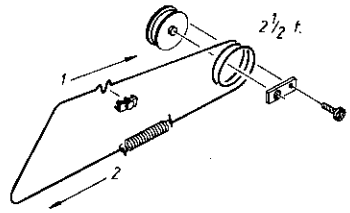

Skalasnor

Dial Cord

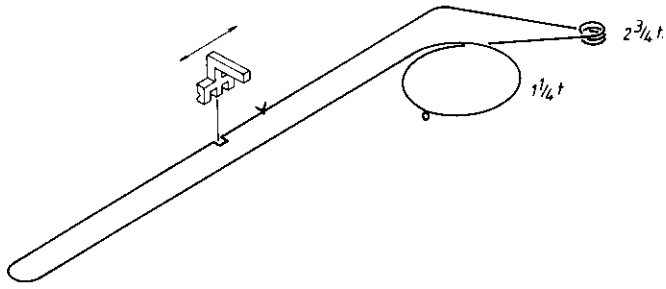

Ophængning på væg

Ophængningssæt, med boreskabelon, skruer og rawplugs, kan rekvireres med reservedelsnr. 3390225.

Sættet indeholder materialer for ophængning af såvel Beomaster som Beocord 2000.

Installing on Wall

Wall installing kit complete with drilling jig, screws & wallplugs are available as spare parts no. 3390225.

The kit is composed to allow wall installing of both Beomaster & Beocord 2000.

Udløserarm for programlåg

Udskiftning af udløserarm, reservedelsnr. 2853099, foregår lettest ved hjælp af en skævbider.

Med skævbideren presses omkring de to messingnitter, således den skrå flade på skævbideren presser nitten op.

Efter udskiftningen kan de to messingnitter igen presses på plads.

Release Lever

Replacement of release lever, spare parts no. 2853099, is preferably made by using a pair of side-cutting pliers.

The side-cutting pliers are pressed around the brass rivets, so the skew side of the pliers press out the rivet.

After replacement of the release lever the brass rivets can be pressed back into place again.

ISOLATIONSTEST

Ethvert apparat **skal** isolationstestes efter det har været adskilt. Testen udføres når apparatet er helt samlet og klar til udlevering til kunden.

Isolationstesten udføres på følgende måde:
De to stikben på netstikket kortsluttes og tilsluttes en af terminalerne på isolationstesteren.

Den anden terminal fra isolationstesteren tilsluttes stel i TP1-stikdåsen (skærm + ben 2).

OBS!
For at undgå beskadigelser på apparatet er det vigtigt, at begge isolationstesterens terminaler har virkelig god kontakt.

Der drejes nu langsomt med spændingsreguleringen på isolationstesteren indtil en spænding på 1,5 - 2 kV er opnået. Her skal den holdes i 1 sekund, derefter drejes der langsomt ned for spændingen igen.

Der må ikke på noget tidspunkt under testen forekomme overslag.

INSULATION TEST

Each set **must** be insulation tested after dismantling. The test is to be performed when the set has been re-assembled and is ready for delivery to the customer.

Make the insulation test as follows:

Short-circuit the two plug pins of the mains plug and connect to one of the terminals of the insulation tester.

Connect the other terminal of the insulation tester to the chassis of the TP 1 socket (screen + pin 2).

NB!
To avoid ruining the set, it is essential that both terminals of the insulation tester are in really good mechanical contact.

Now slowly turn the voltage control of the insulation tester until a voltage of 1.5 - 2 kV is obtained. Hold it there for 1 second, then slowly turn the voltage down again.

At no point during the testing procedure any flash-overs are permissible.

Bang&Olufsen

Beomaster 3000

Type 2931/32/33/35/37/39

Terminal 3000

Type 2044

PASTE INTO SERVICEANVISNING BEOMASTER 2000, type 291x
PASTE INTO SERVICE MANUAL BEOMASTER 2000, type 291x

SEMI-CONDUCTORS

20	136	203	209	215	219		
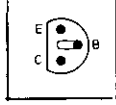	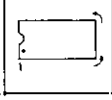						

4TR5	8320104	**20**	BC 558 B
4TR6	8320108	**20**	BC 548 B
4TR7	8320104	**20**	BC 558 B
4TR8-10	8320108	**20**	BC 548 B
4D4	8330004	**219**	SFH 205
		219	TIL 100
		219	BPW 41
4D5-7	8300058	**209**	1N 4148
		215	1N 4148
16TR1	8320331	**20**	BC 328-25
16TR2	8320398	**20**	BC 558 C
16TR3-4	8320108	**20**	BC 548 B

16TR5	8320398	**20**	BC 558 C
16TR6-7	8320108	**20**	BC 548 B
16IC1△	8340655	**136**	μC
16D1-8	8300058	**209**	1N 4148
		215	1N 4148
16D10	8300169	**209**	BZX 79 5.1V
		209	ZPD 5.1V
		209	BZX 83 5.1V
16D11-13	8300058	**209**	1N 4148
		215	1N 4148
17D2-4	8330022	**203**	LD 271
		203	V-290-P
90D1	8330010	**220**	CQY 73 N

Other semi-conductors as for types 291x

DIAGRAM A, type 2939

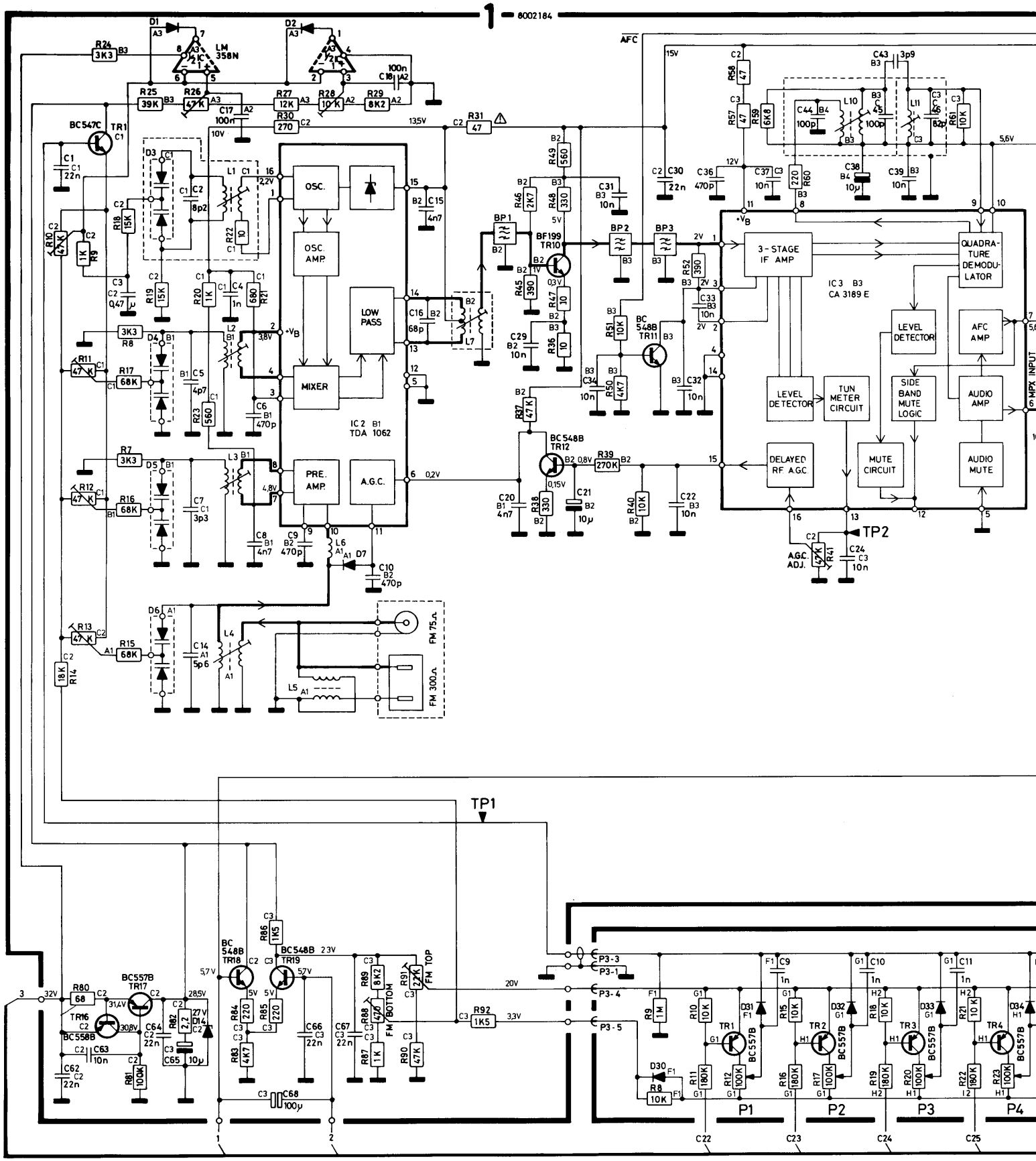

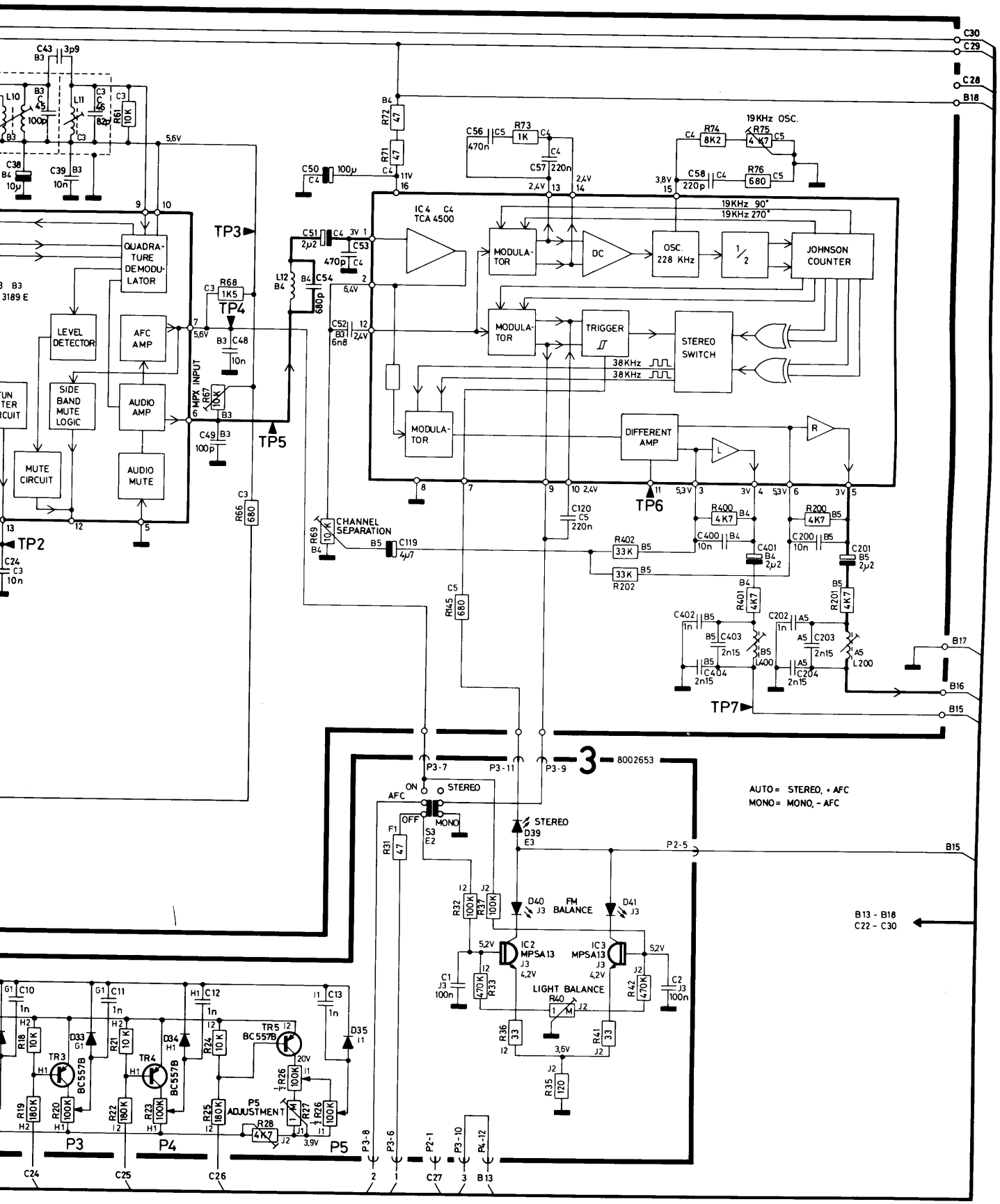
QUADRATURE DEMODULATOR
LEVEL DETECTOR
AFC AMP
SIDE BAND MUTE LOGIC
AUDIO AMP
MUTE CIRCUIT
AUDIO MUTE
MPX INPUT
IC4 C4 TCA 4500
MODULATOR
DC
OSC. 228 KHz
1/2
JOHNSON COUNTER
19KHz OSC.
19KHz 90°
19KHz 270°
TRIGGER
STEREO SWITCH
38KHz
DIFFERENT AMP
CHANNEL SEPARATION
TP2
TP3
TP4
TP5
TP6
TP7
8002653
AUTO = STEREO, + AFC
MONO = MONO, - AFC
AFC
ON
OFF
STEREO
MONO
FM BALANCE
LIGHT BALANCE
IC2 MPSA13
IC3 MPSA13
P5 ADJUSTMENT
BC557B
P3
P4
P5

Bang & Olufsen

DIAGRAM A, types 2931/33

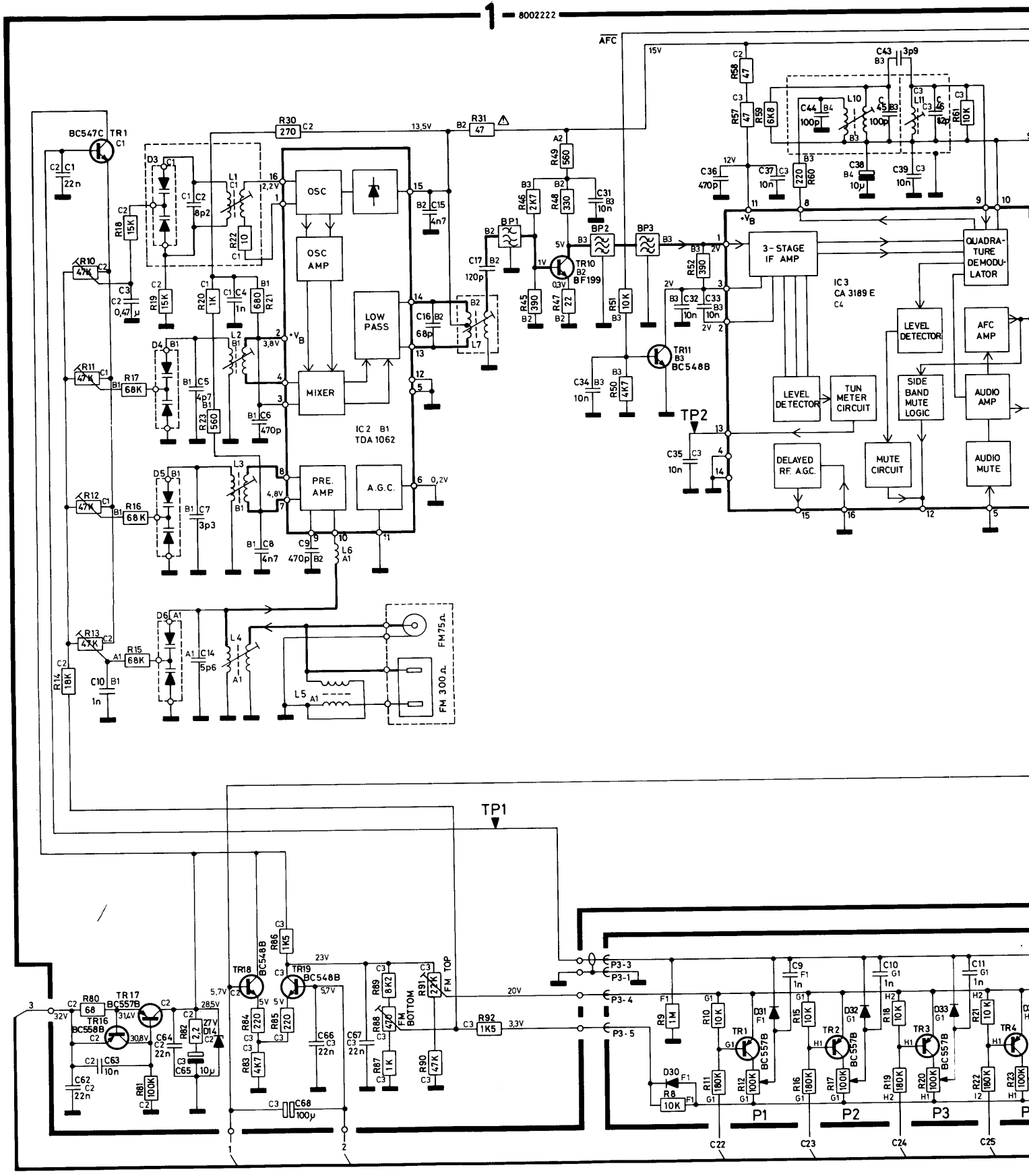

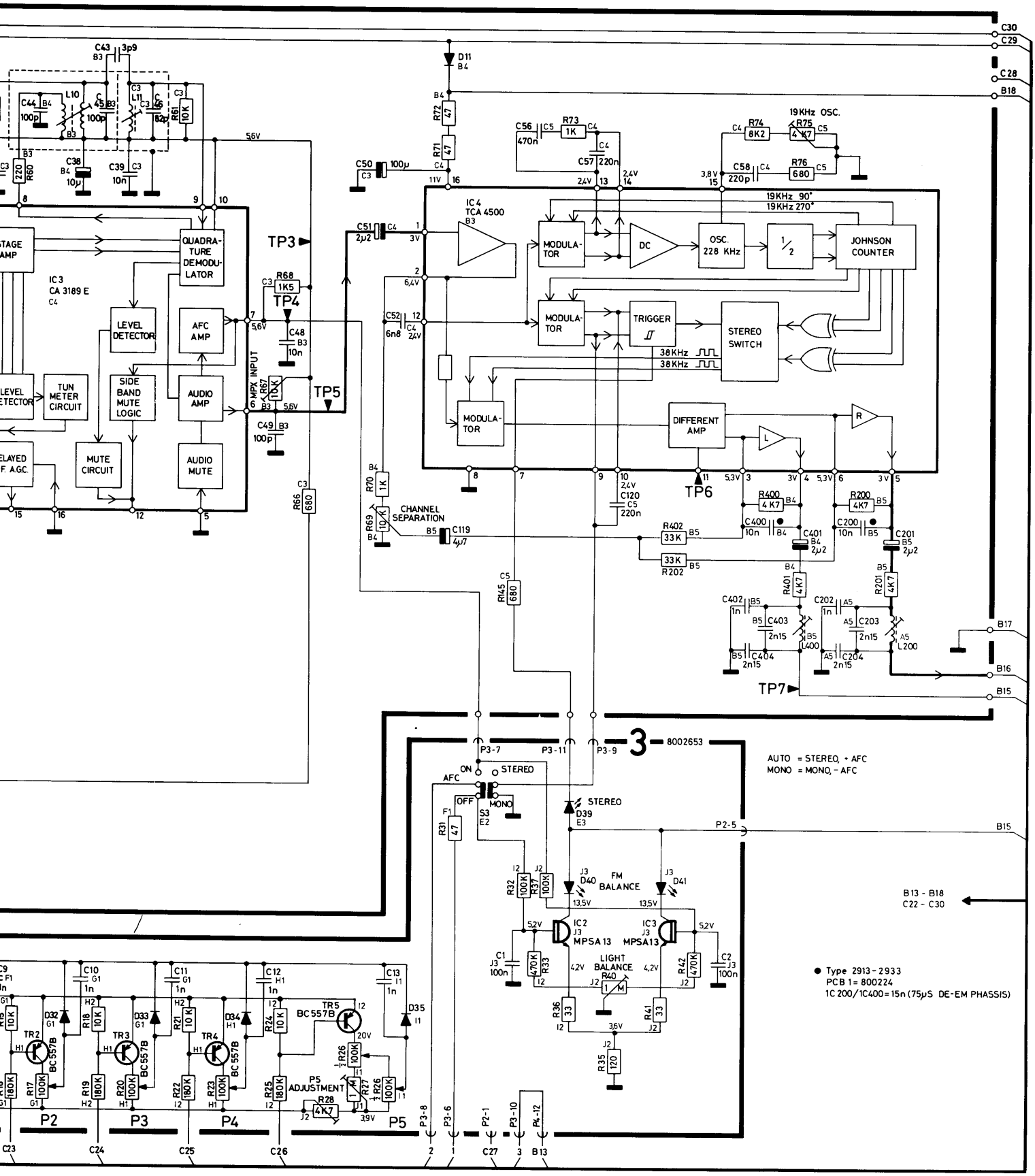
IC 3
CA 3189 E
QUADRATURE DEMODULATOR
LEVEL DETECTOR
AFC AMP
TUN METER CIRCUIT
SIDE BAND MUTE LOGIC
AUDIO AMP
MUTE CIRCUIT
AUDIO MUTE
MPX INPUT
TP3
TP4
TP5
IC 4
TCA 4500
MODULATOR
DC
OSC. 228 KHz
JOHNSON COUNTER
TRIGGER
STEREO SWITCH
DIFFERENT AMP
CHANNEL SEPARATION
19KHz OSC.
19KHz 90°
19KHz 270°
38KHz
TP6
TP7
P3-7
P3-11
P3-9
3 8002653
ON
AFC
STEREO
OFF
MONO
S3
D39
AUTO = STEREO, + AFC
MONO = MONO, − AFC
FM BALANCE
IC2 MPSA13
IC3 MPSA13
LIGHT BALANCE
P5 ADJUSTMENT
TR2 BC557B
TR3 BC557B
TR4 BC557B
TR5 BC557B
P2
P3
P4
P5
B13 - B18
C22 - C30
● Type 2913-2933
PCB 1= 800224
1C 200/1C400=15n (75µS DE-EM PHASSIS)

DIAGRAM A, types 2932/35/37

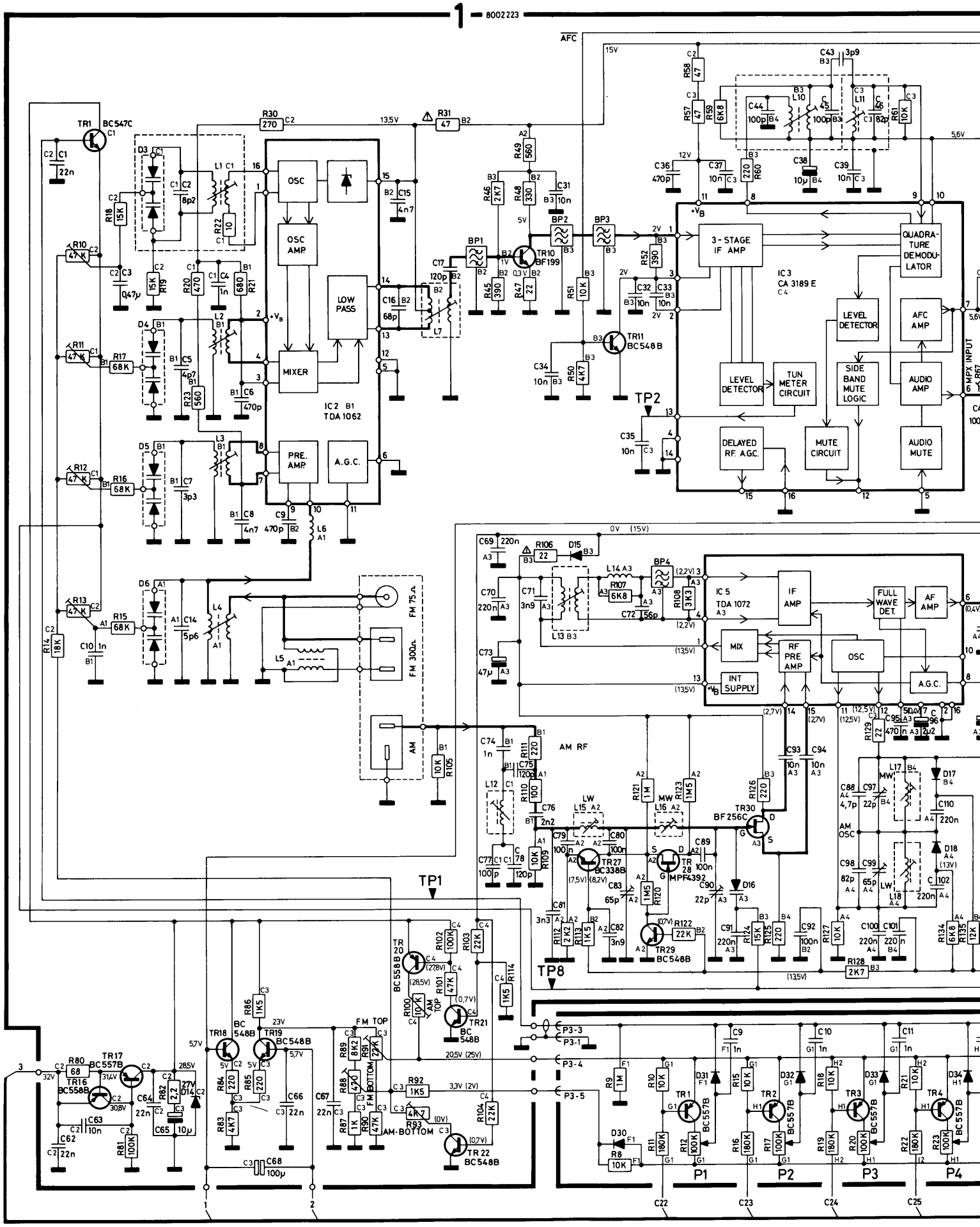

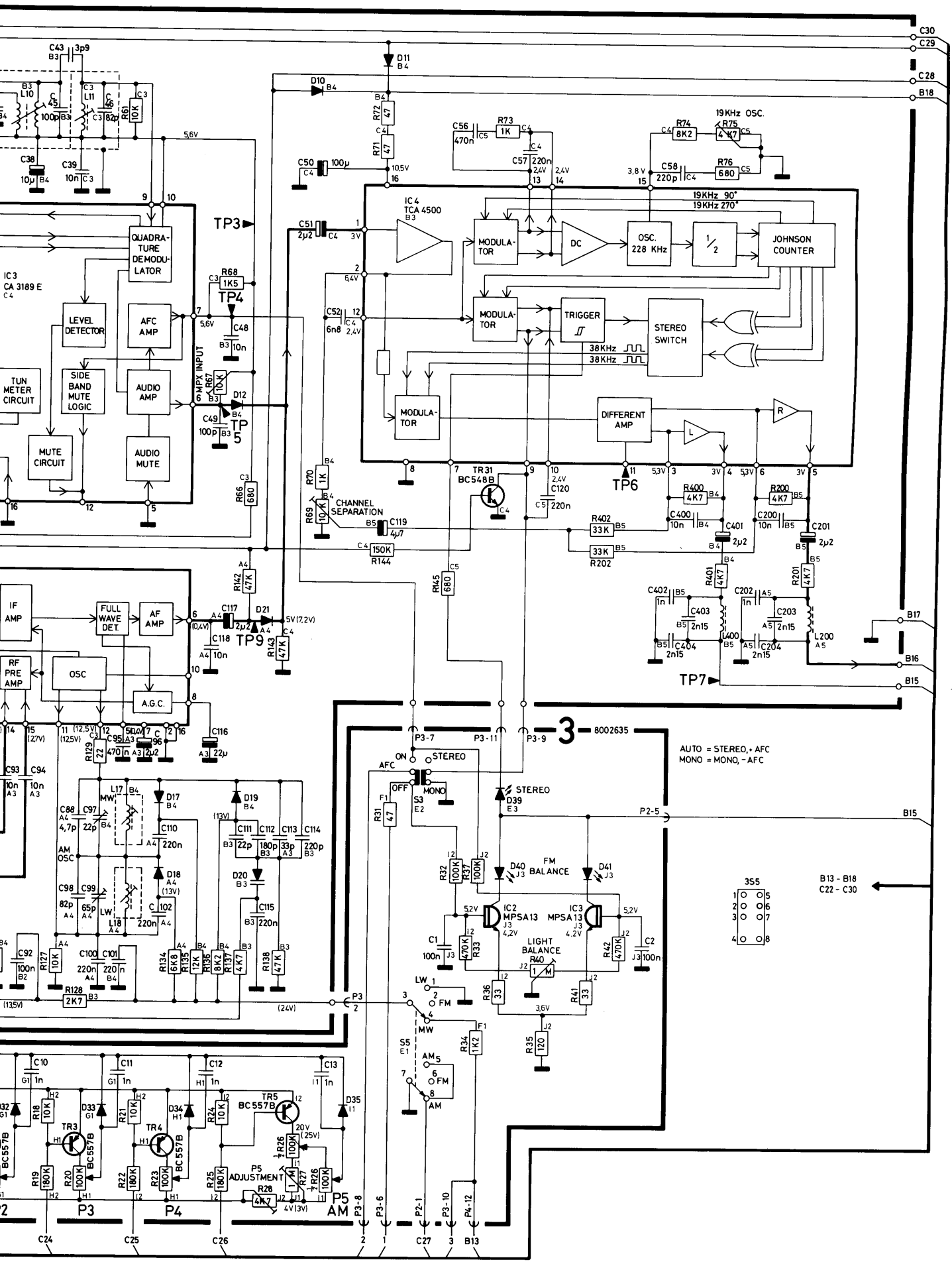
IC 3
CA 3189 E
QUADRATURE DEMODULATOR
LEVEL DETECTOR
AFC AMP
SIDE BAND MUTE LOGIC
AUDIO AMP
TUN METER CIRCUIT
MUTE CIRCUIT
AUDIO MUTE
MPX INPUT
TP3
TP4
TP5
TP6
TP7
TP9
IC 4
TCA 4500
MODULATOR
DC
OSC. 228 KHz
JOHNSON COUNTER
TRIGGER
STEREO SWITCH
DIFFERENT AMP
19 KHz OSC.
19KHz 90°
19KHz 270°
38KHz
CHANNEL SEPARATION
TR31
BC548B
IF AMP
FULL WAVE DET.
AF AMP
RF PRE AMP
OSC
A.G.C.
AM OSC
MW
LW
STEREO
MONO
OFF
AFC
ON
AUTO = STEREO, + AFC
MONO = MONO, - AFC
FM BALANCE
LIGHT BALANCE
IC2
MPSA13
IC3
MPSA13
3S5
B13 - B18
C22 - C30
TR3
TR4
TR5
BC557B
P5 ADJUSTMENT
P5 AM
P3
P4
8002635

Bang & Olufsen

DIAGRAM B, all types

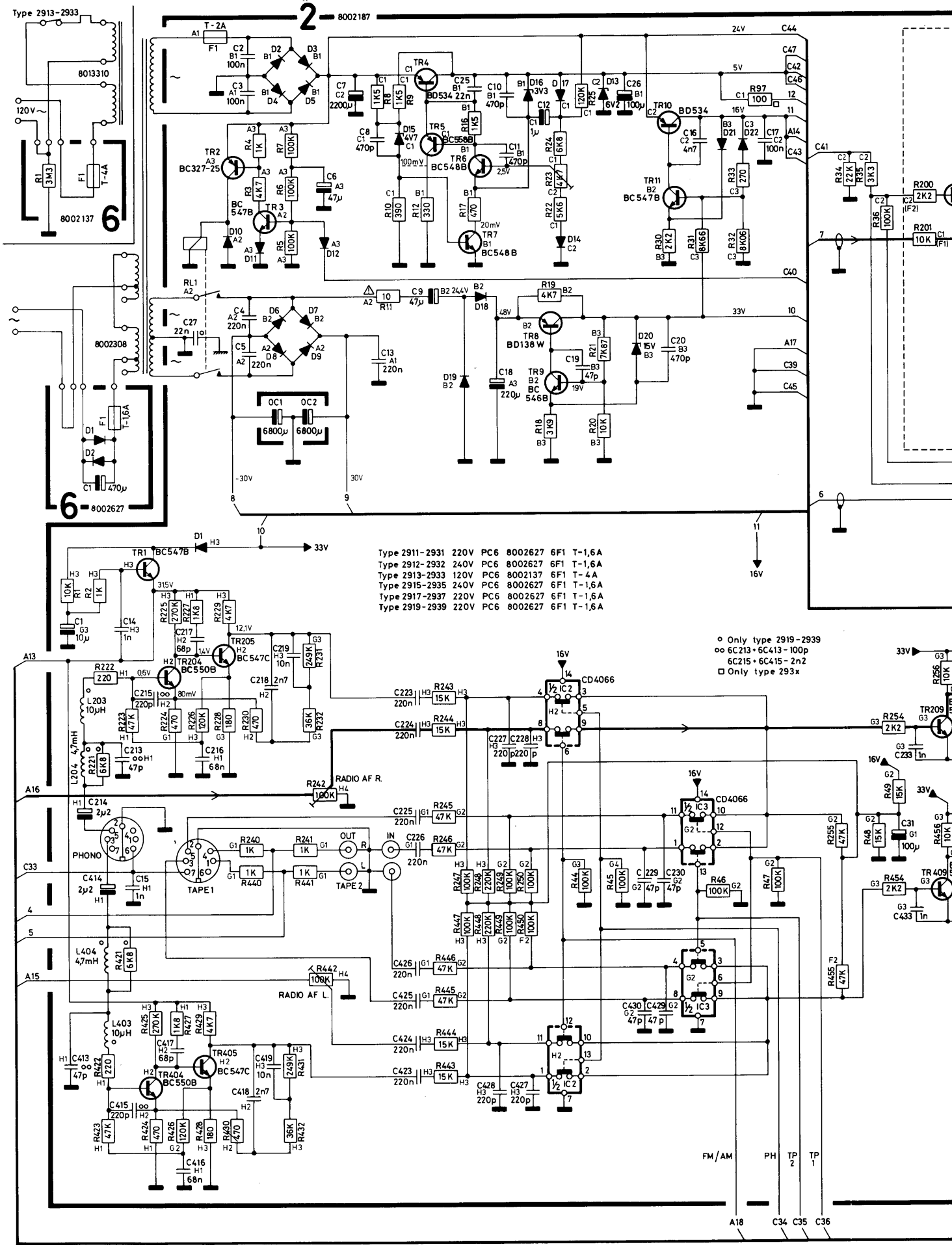

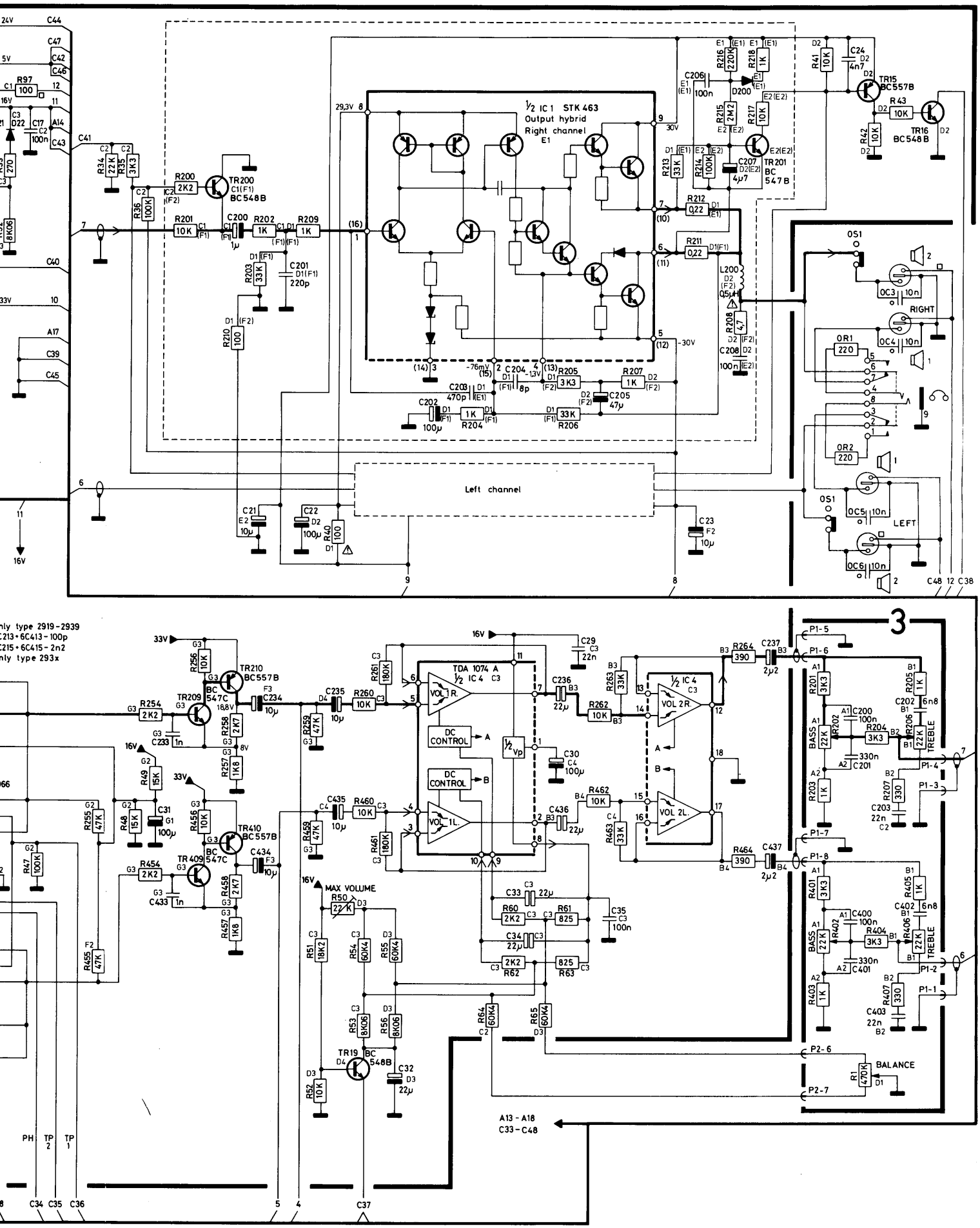
½ IC 1 STK 463
Output hybrid
Right channel
E1
Left channel
TR200 BC548B
TR201 BC 547B
TR15 BC557B
TR16 BC548B
RIGHT
LEFT
TDA 1074 A
½ IC 4
VOL 1R.
VOL 1L.
VOL 2R.
VOL 2L.
DC CONTROL
MAX VOLUME
BASS
TREBLE
BALANCE
TR210 BC557B
TR209 BC 547C
TR410 BC557B
TR 409 BC 547C
TR19 BC 548B
A13 - A18
C33 - C48

DIAGRAM C, all types 293x

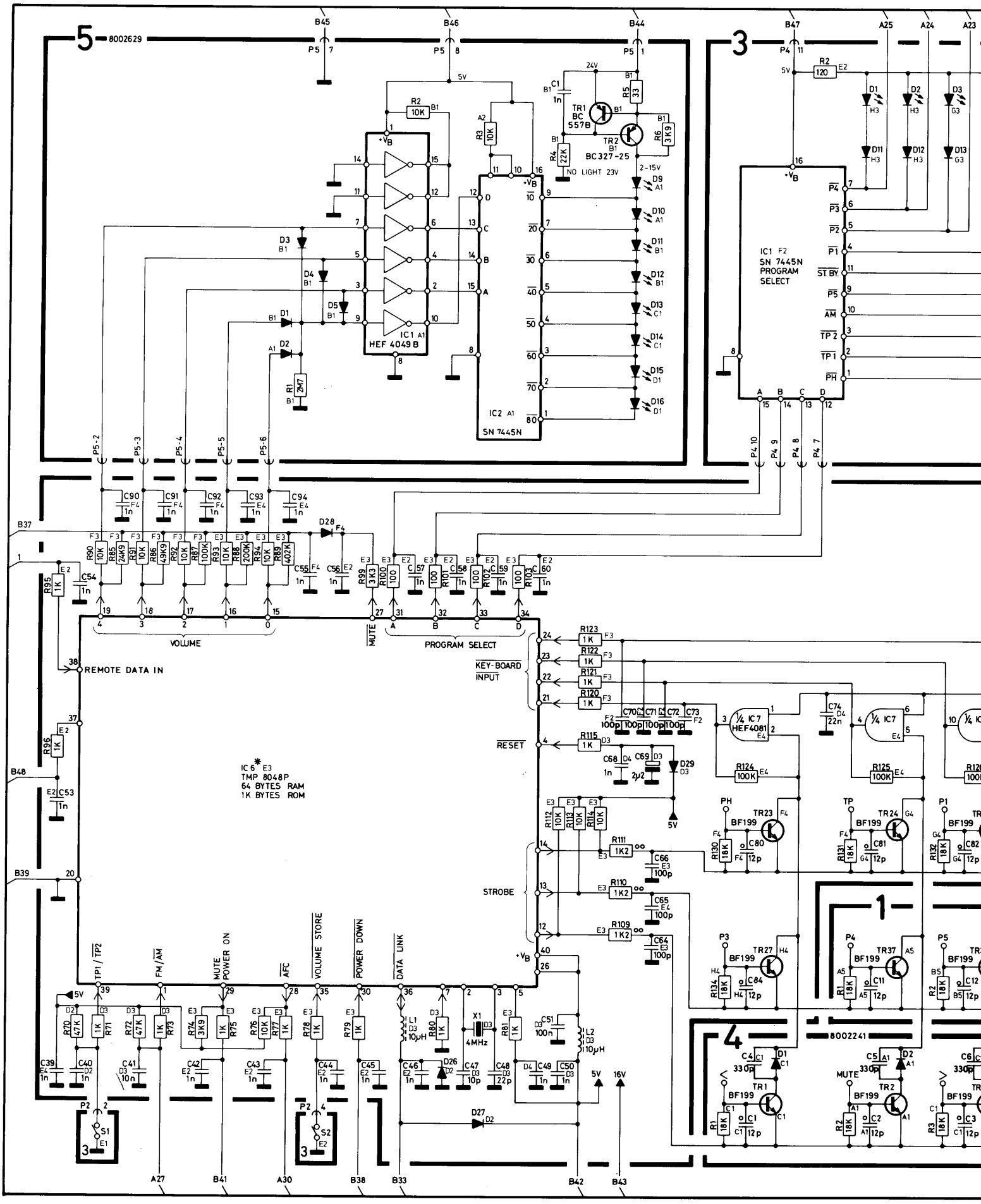

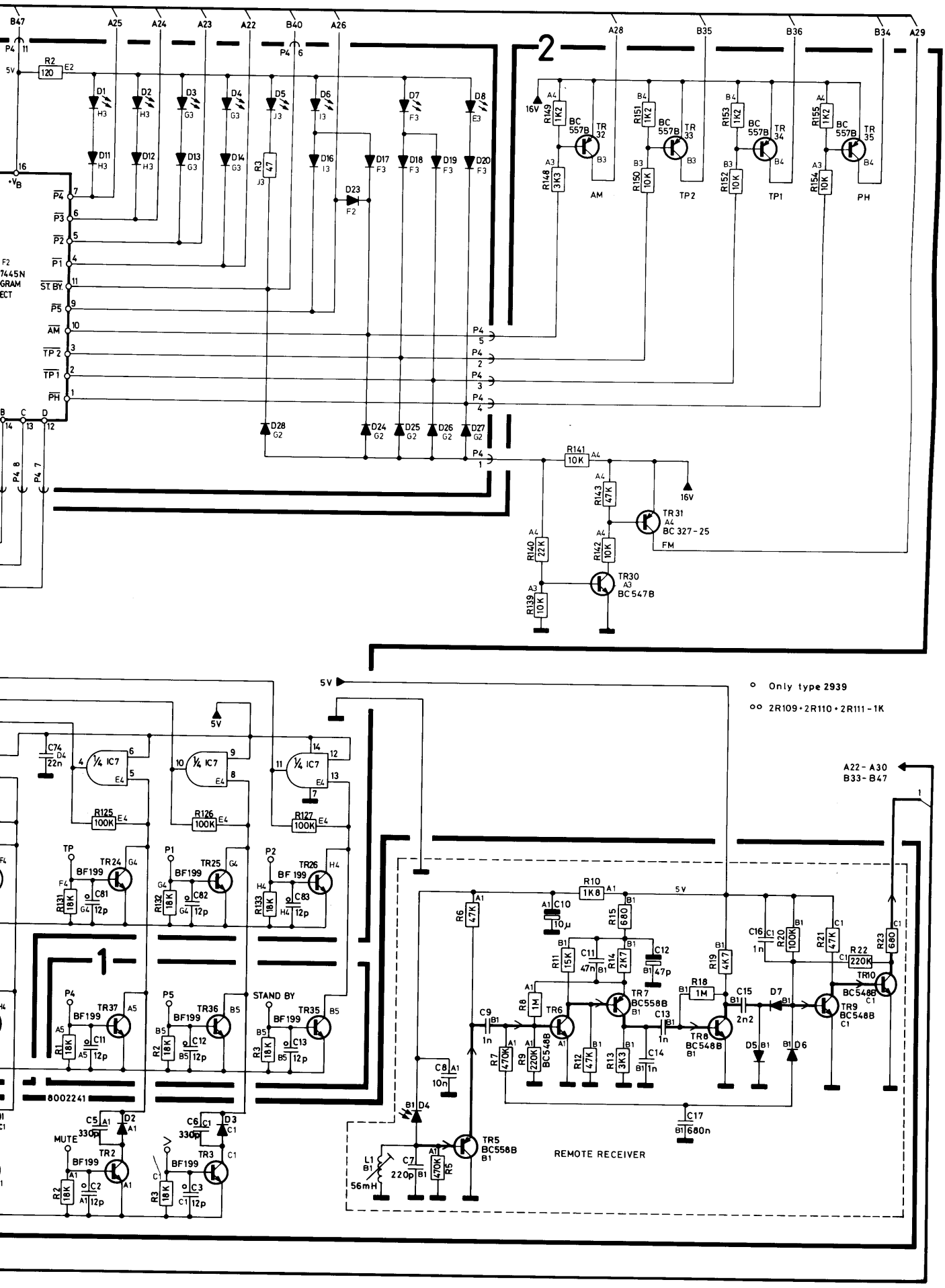
2
1
AM
TP2
TP1
PH
FM
TR31 A4 BC 327-25
TR30 A3 BC547B
REMOTE RECEIVER
TR5 BC558B
TR7 BC558B
TR6 BC548B
TR8 BC548B
TR9 BC548B
TR10 BC548B
TR24 BF199
TR25 BF199
TR26 BF199
TR37 BF199
TR36 BF199
TR35 BF199
TR2 BF199
TR3 BF199
STAND BY
MUTE
8002241
Only type 2939
2R109 • 2R110 • 2R111 - 1K
A22 - A30
B33 - B47

DIAGRAM D, type 2044

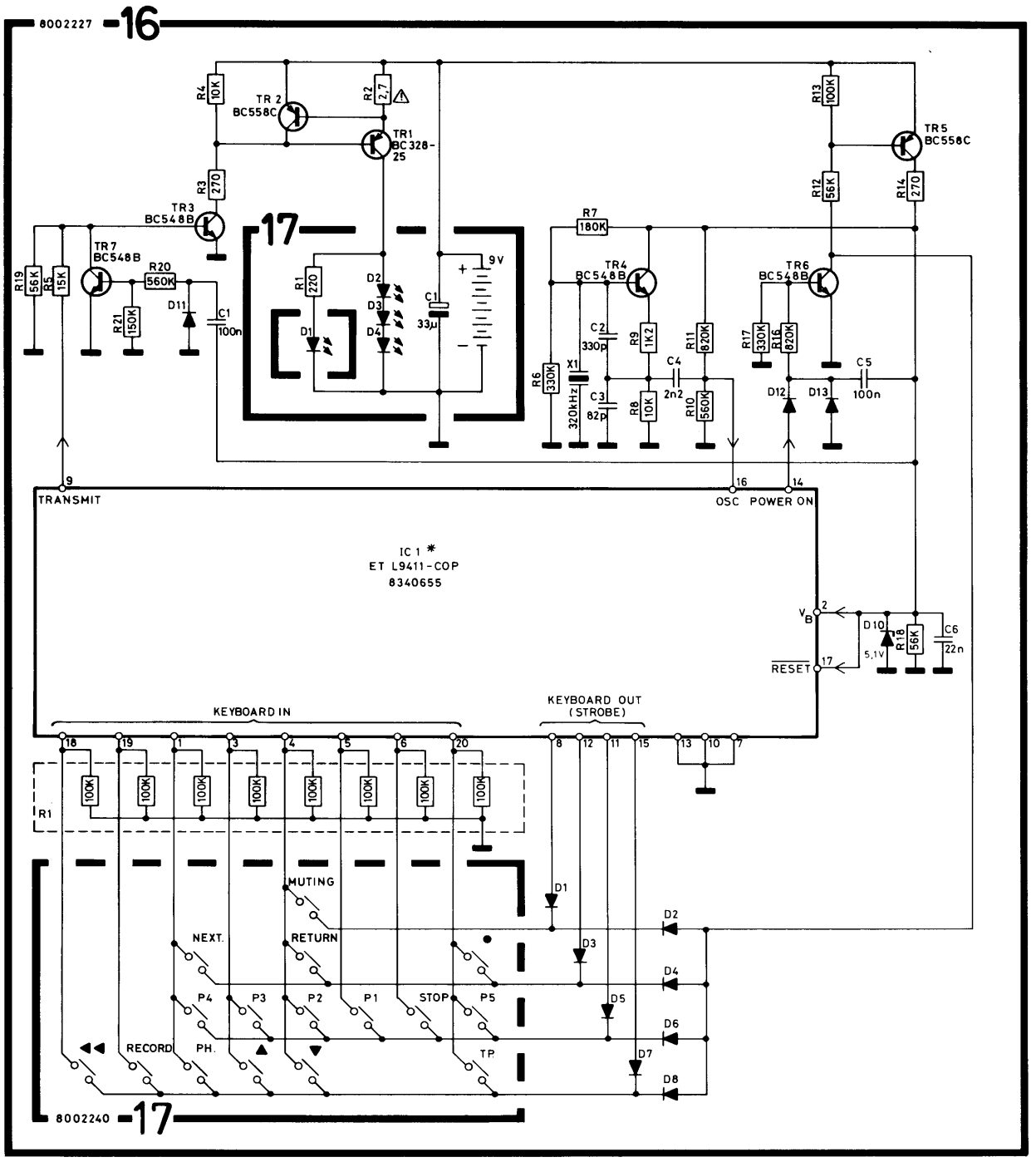

PARTS LIST

Resistors not mentioned are standard 5%, 1/4 W carbon film.

PCB 4 - 8002241 Volume Control & IR-receiver

C07	4000018	220 pF 5% 63V	C13	4010027	1 nF 10% 63V
C08	4010041	10 nF -20+80% 40V	C14	4010027	1 nF 10% 63V
C09	4010027	1 nF 10% 63V	C15	4010061	2.2 nF 10% 63V
C10	4200484	10 µF 25V	C16	4010027	1 nF 10% 63V
C11	4130223	47 nF 10% 63V	C17	4130237	0.68 µF 20% 63V
C12	4200483	47 µF 16V			
L01	8022128	56 mH			

PCB 16 - 8002227 Remote Transmitter

C1	4130224	0.1 µF 10% 63V	C4	4010061	2.2 nF 10% 63V
C2	4010062	330 pF 10% 63V	C5	4130224	0.1 µF 10% 63V
C3	4000200	82 pF 5% 63V	C6	4130193	22 nF 20% 63V
R1	5030017	8 x 100 kΩ 5% 1/8W	X1	8030039	320 kHz ±1 kHz
R2	5020625	2.7 Ω 5% 1/3W			

PCB 17 - 8002240 Keyboard

C1	4200414	33 µF 16V

Correction PCB 5

C1	4010027	1 nF 10% 63V

Terminal 3000, 8920440

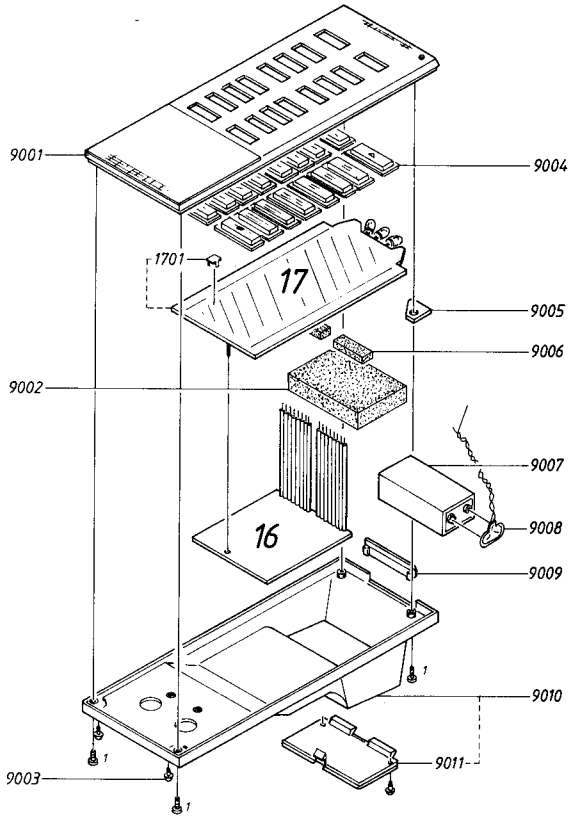

16Modul	8002227	PCB - Microcomputer & IR-sender	PCB - Micro computer & IR-transmitter
17Modul	8002240	PCB - Betjening	PCB - Keyboard
1701	7500148	Kontaktfjeder	Switch
9001	3168256	Panel	Panel
9002	3917036	Skumklods	Foam block
9003	3010007	Glidesko	Plastic foot
9004	2775946	Knapsæt	Set of buttons
9005	6141031	Printplade (uden 90D1)	Printed circuit board (w/o 90D1)

9006	3947031	Skumtape	Piece of foam tape
9007	8700000	Batteri 9V alkaline	Battery 9V alkaline
9008	7229020	Batteritilslutning	Battery connector
9009	3322058	Rude	Window
9010	3454347	Bund	Bottom
9011	3160031	Dæksel	Cover
1	2011023	Skrue 2,2x6,5 sort	Screw 2.2x6.5 black

Beomaster 3000

04Modul	8002241	PCB - Volume & IR-modtager	PCB - Volume & IR-receiver
	3152430	Afstandsstykke f/IR-diode	Spacer f/IR-diode
	3302391	Skærm, øvre	Screen, upper
	3302392	Skærm, nedre	Screen, lower
	3300083	Skærm IR-diode	Screen IR-diode
	3170230	Isolationsstykke	Insulating piece
1001	3168431	Primær betjeningspanel	Panel primary control
1013	3112300	Bund, komplet	Bottom, complete
	3322106	Rude f/IR-diode	Window f/IR-diode
1015	7210378	Højttalerstikdåse 3 polet	Speaker socket 3 pins
1016	3452498	Bagstykke 2931	Rear panel 2931
	3452499	Bagstykke 2932	Rear panel 2932
	3452500	Bagstykke 2933	Rear panel 2933
	3452501	Bagstykke 2935	Rear panel 2935
	3452502	Bagstykke 2937	Rear panel 2937
	3452503	Bagstykke 2939	Rear panel 2939
1021	3414780	Kabinet forstykke	Cabinet front

Ikke viste dele
Parts Not Shown

3391630	Emballage f/terminal	Packing f/terminal
3390001	Plastpose 150x300 mm	Plastic bag 150x300 mm
3397542	Skumemballagesæt	Set of foam packing

Øvrige dele som 291x — *Other parts as for 291x*

JUSTERING

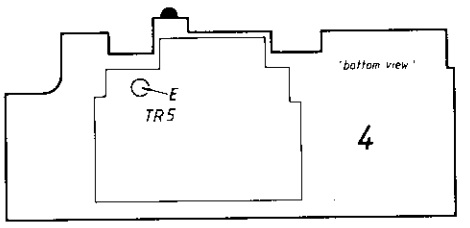

Følsomhed fjernbetjeningsmodtager

Oscilloskop tilsluttes emitteren på 4TR5.

Aktiver „volume ned" (▽) på Terminal 3000.

Med 4L1 justeres til maksimum.

Øvrige justeringer som anført for type 291x

ADJUSTMENTS

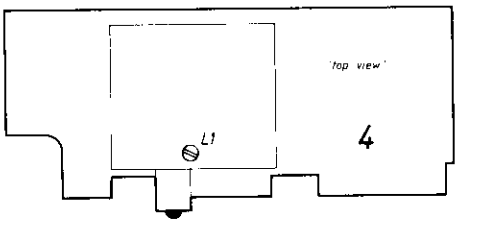

Remote Receiver Sensitivity

Connect oscilloscope to the emitter of 4TR5.

Activate "volume down" (▽) on Terminal 3000.

Adjust 4L1 until maximum is obtained.

Other adjustments as stated for types 291x

BANG & OLUFSEN
DK – 7600 STRUER
DENMARK

TELEPHONE 07 – 85 11 22* – TELEX 66529
CABLE ADDRESS BANGOLUF

3538597 06-84

PRINTED IN DENMARK BY BOGTRYKKERGÅRDEN AS, STRUER 06-84

BANG & OLUFSEN
DK – 7600 STRUER
DENMARK

TELEPHONE 07 – 85 11 22* – TELEX 66529
CABLE ADDRESS BANGOLUF

3538586 01-84

TED IN DENMARK BY BOGTRYKKERGÅRDEN AS, STRUER 01-84