1993

MITSUBISHI Service Manual

COLOUR TV

ВНИМАНИЕ!!!Эта схема НЕ предназначена для продажи на дисках.Схему можно свободно получить на сайте "www.radiolom.by.ru"(www.hot.ee/juden001/).Если Вы её купили на болванке,то Вас капитально наебли!Не поддерживайте этих пидоров-торговцев краденным!!!
WARNING!!!This scheme not for selling on CD,its possible liberally get on put www.radiolom.by.ru.If You have sold this scheme on CD,that You have well defrauded.Do Not buy the thieved belongings!The Death thief!

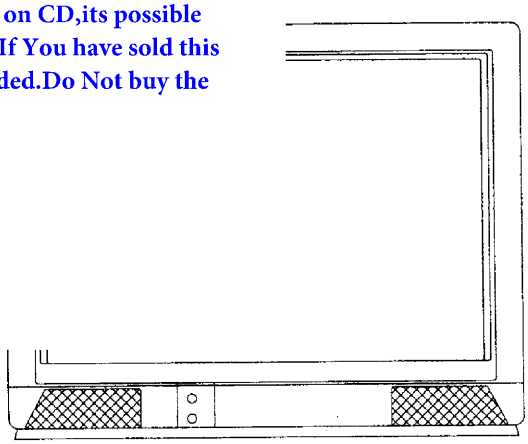

MODEL

CT-21A5LST
CT-21A5STX
CT-25A5STX

CAUTION
Before servicing this chassis, it is important that the serviceman reads the "SAFETY PRECAUTIONS" in this service manual.

SPECIFICATION

• **Power Input**	AC 230V; 50Hz [CT-21A5LST] AC 240V; 50Hz [CT-21/25A5STX]
• **Power Consumption**	88W [CT-21A5LST/STX] 97W [CT-25A5STX]
• **Reception System**	CCIR-I
• **Colour System**	PAL, 60PAL
• **Reception**	VHF 44.5~60.5MHz, 174~214MHz [CT-21A5LST] UHF 470~870MHz CATV 68~89MHz, 104~470MHz [CT-21A5LST]
• **Intermediate Frequency**	Video IF Carrier 39.5MHz Sound IF Carrier 33.5MHz
• **Aerial Input**	75Ω
• **Speaker**	100mm Round type 2pcs 40mm × 70mm 2pcs
• **Chassis**	E14SF
• **Picture tube**	A51EAL55X01 21″ 90° Deflection [21″ model] A59ECY13X01 25″ 110° Deflection [25″ model]
• **Picture high voltage**	26.5kV (at 1.0mA)
• **Cabinet Dimensions**	495(W)×447(H)×485(D)mm [CT-21A5LST/STX] 572(W)×505(H)×442(D)mm [CT-25A5STX]
• **Weight(Approx.)**	21.9kg [CT-21A5LST/STX] 26.2kg [CT-25A5STX]

MITSUBISHI ELECTRIC

CONTROLS AND CABINET PARTS

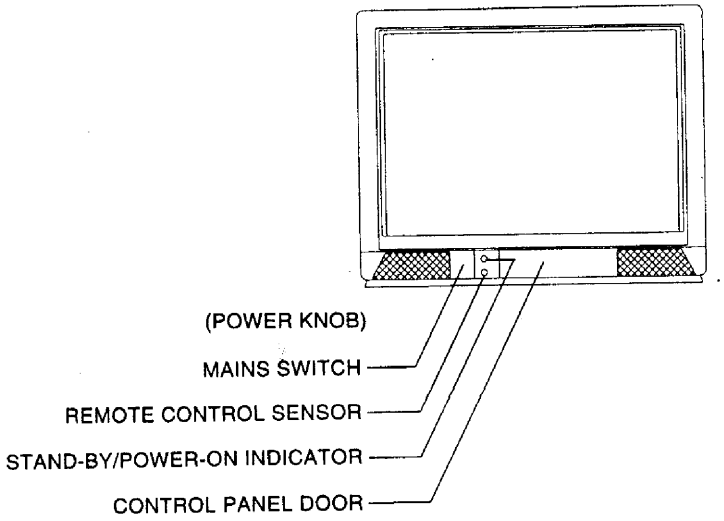

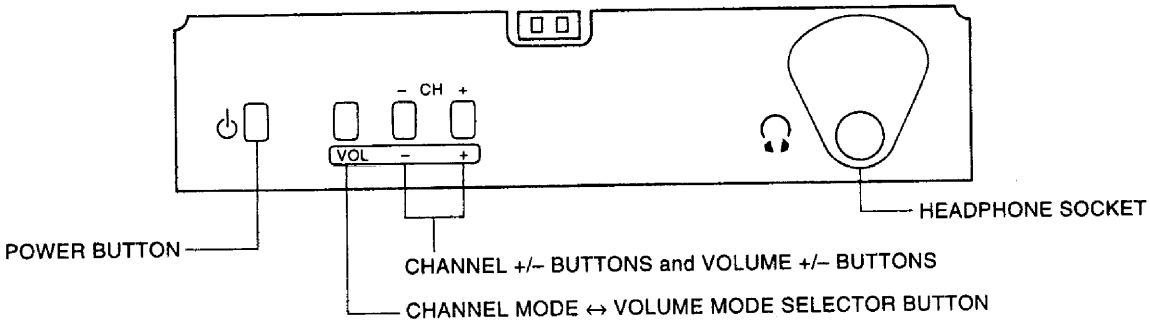

SCARTS SOCKET CONNECTORS

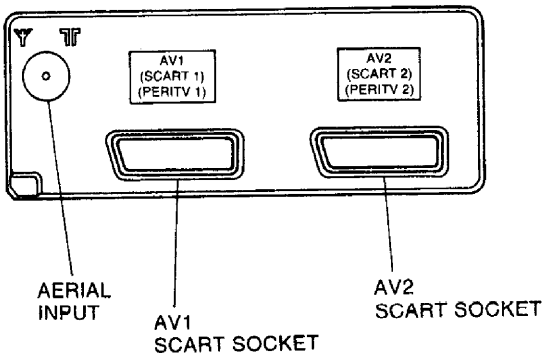

MODE / PIN	AV1	AV2
1	AUDIO OUT R	
2	AUDIO IN R	
3	AUDIO OUT L	
4	AUDIO EARTH	
5	BLUE EARTH	NOT CONNECTED
6	AUDIO IN L	
7	BLUE IN	NOT CONNECTED
8	FUNCTION SWITCH	
9	GREEN EARTH	NOT CONNECTED
10	NOT CONNECTED	
11	GREEN IN	NOT CONNECTED

MODE / PIN	AV1	AV2
12	NOT CONNECTED	
13	RED EARTH	NOT CONNECTED
14	BLANKING EARTH	NOT CONNECTED
15	RED IN	NOT CONNECTED
16	RGB STATUS (BLANKING)	NOT CONNECTED
17	VIDEO EARTH	
18	VIDEO IN EARTH	
19	VIDEO OUT	
20	VIDEO IN	
21	SOCKET EARTH	

LEAD DRESS

The lead wires clamped are listed in the table below.

Note: The inner wires are clamped so that they do not come close to the heat generating or high-tension parts. After servicing route all wires in their original position.

The anode lead wires are routed so no tensile sterngth is applied to the anode cap. If the mounting angle of the anode cap and the route of the anode lead wires are changed. Return them to the initial angle and route.

ВНИМАНИЕ!!!Эта схема НЕ предназначена для продажи на дисках.Схему можно свободно получить на сайте "www.radiolom.by.ru"(www.hot.ee/judeп001/).Если Вы её купили на болванке,то Вас капитально наебли!Не поддерживайте этих пидоров-торговцев краденным!!! WARNING!!!This scheme not for selling on CD,its possible liberally get on put www.radiolom.by.ru.If You have sold this scheme on CD,that You have well defrauded.Do Not buy the thieved belongings!The Death thief!

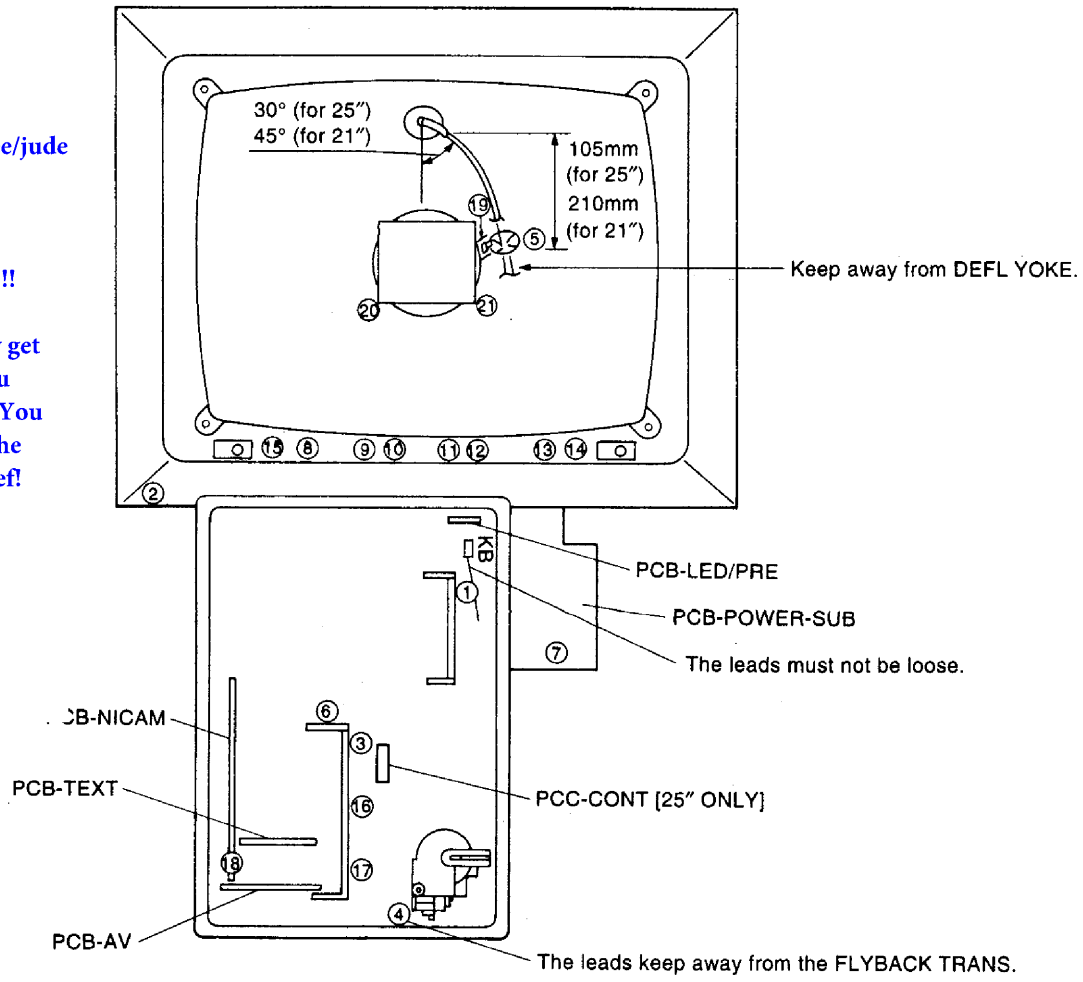

CLAMPER LIST FOR CONNECTOR LEAD

CONNECTOR LEAD	CLAMP
ANODE-LEAD	⑤ must be held by ⑲
DD	⑥
DJ-SP393	②-⑮-⑧-⑨-⑩-⑪-⑫-⑬ (21" only)-⑭
DJ-SP394	②
DK	② (Loop DK to take up slack)
DY	③ (1 loop)-⑯-⑰
FOCUS-LEAD	④-㉑
GA	⑥-⑱-⑳
KB	①
LB	④-㉑
PC	⑦ (1 loop 21" only)-①
SA	⑯-⑰
SCREEN LEAD	④-㉑

LEAD CONNECTOR COLOUR CODE

Lead connectors show the connector names by colour codes of leads, not printed any connector names.
When connecting or removing them, identify connector names according to colour codes in the table below.
Colour Codes (See Pin Nos. 1 and 2 of connectors)

Colour	Code
BLACK	A
BROWN	B
RED	C
ORANGE	D
YELLOW	E
GREEN	NOT USED (GROUND)
BLUE	G
VIOLET	H
GREY	J
WHITE	K
PINK	L

Example:

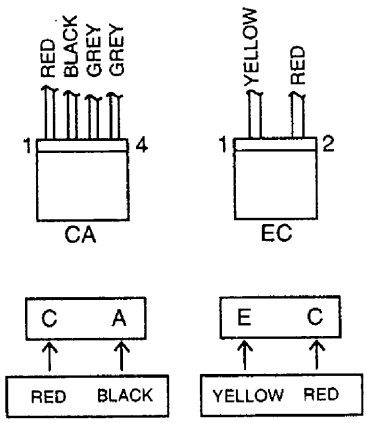

WHEN SERVICING PCB USE THE EXTENSION CORD

PRINTED CIRCUIT BOARD	CONNECTOR	PARTS NO.
AV NICAM TEXT LED/PRE	CB (15pin) DA (9pin), DB (12pin) HB (8pin) HC (5pin)	859C431O40
PCC-CONT (only 25")	LA (6pin)	859C431O60
AV	CA (11pin)	859C432O40
TEXT	HA (10pin)	859C432O80

ВНИМАНИЕ!!!Эта схема НЕ предназначена для продажи на дисках.Схему можно свободно получить на сайте "www.radiolom.by.ru"(www.hot.ee/juden001/).Если Вы её купили на болванке,то Вас капитально наебли!Не поддерживайте этих пидоров-торговцев краденным!!!
WARNING!!!This scheme not for selling on CD,its possible liberally get on put www.radiolom.by.ru.If You have sold this scheme on CD,that You have well defrauded.Do Not buy the thieved belongings!The Death thief!

ELECTRICAL ADJUSTMENT

Perform only the alignments required.
If proper equipment is not available, do not attempt an alignment.

■ Measuring equipment and Jigs

- Oscilloscope (Unless otherwise specified in particular, use 10:1 probes.)
- Signal generator
- Direct current milliammeter
- Direct current voltmeter.
- Electrical tools

■ Test Signal

1) Monoscope signal
When you have no monoscope signal source for adjustment, connect the unit to a VCR and play an alignment tape (Monoscope).

2) Colour bar signal
In this manual, unless otherwise specified in particular, use colour bar signal in specifications below.

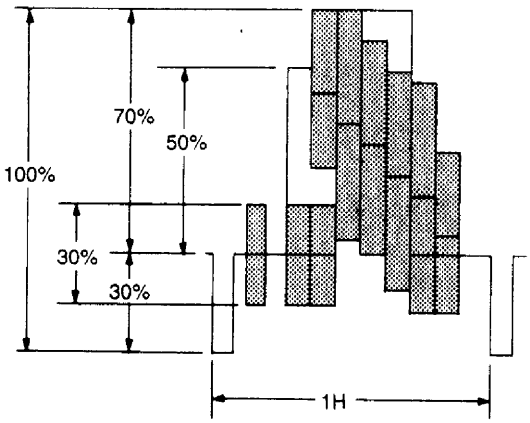

PAL

Split-Field Colour Bars (with 100% window)

LOCATION OF TESTPOINTS AND ADJUSTMENTS

PCB-MAIN (COMPONENT SIDE)

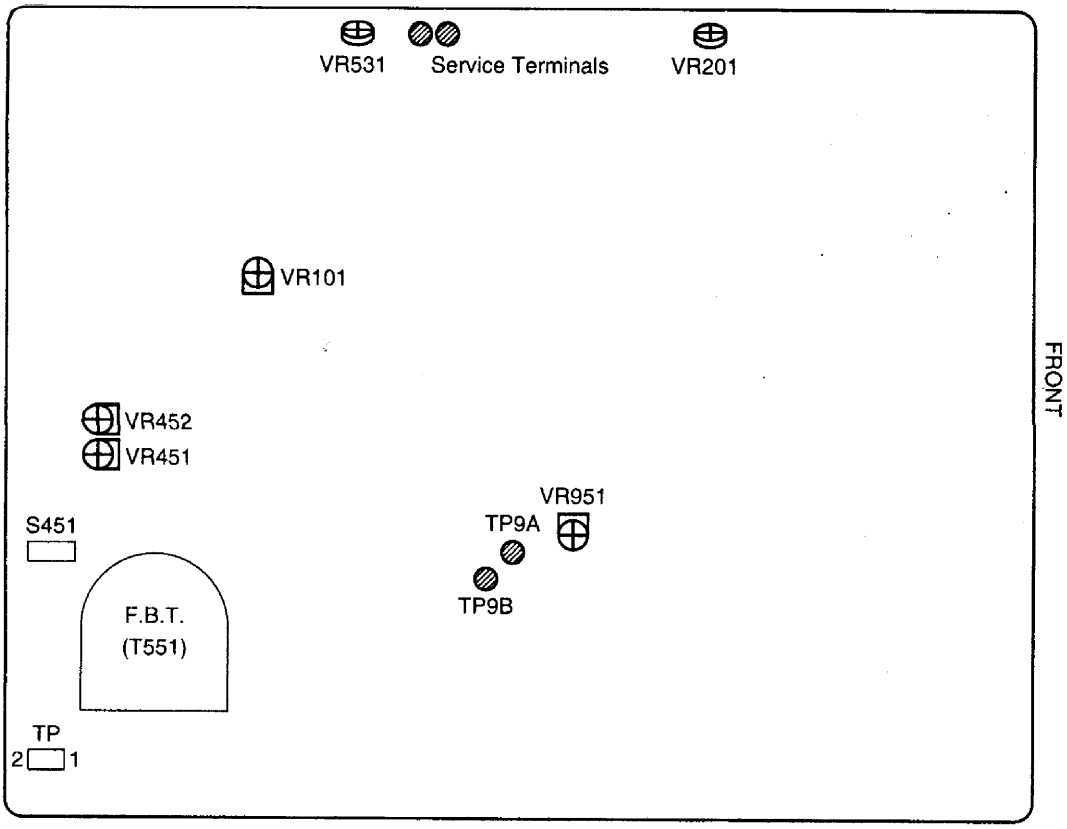

PCB-CRT (SOLDER SIDE)

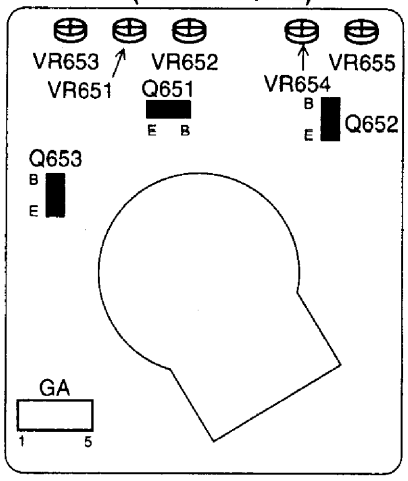

PCB-PCC CONT
(COMPONENT SIDE)

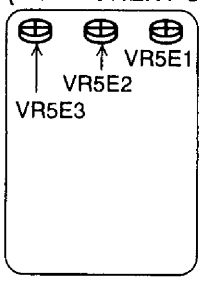

PCB-NICAM (COMPONENT SIDE)

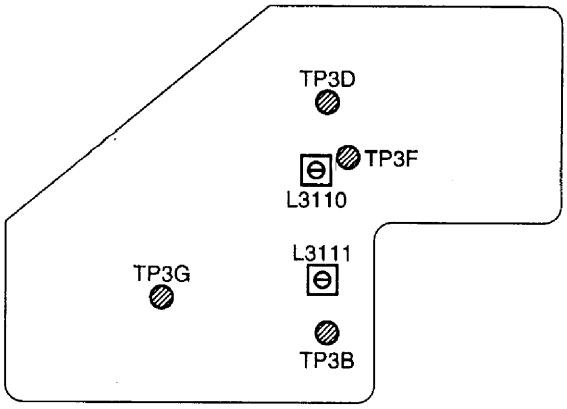

[Audio Detection Circuit] 1. VCO Coil	**Adjustment purpose** Setting VCO free run frequency. **Symptom when incorrectly adjusted** NICAM and normal audio poor also S/N ratio poor.

Measuring instrument	DC Voltmeter
Test point	TP3D
EXT trigger	---
Measurement range	---
Input signal	Sinewave signal (39.5MHz, 90±2dBμ)
Input terminal	TP3B

1. Remove the ANTENNA cable from RF IN terminal.
2. Short-circuit TP3F and ground.
3. Observe the DC voltage at TP3D.
4. Measure the DC voltage on TP3D.
5. Open the short circuit of TP3F and ground.
6. Supply a sinewave signal (39.5MHz, 90±2dBμ) to TP3B using the circuit, as shown in figure.
7. Adjust L3110 so that the voltage reading on TP3D is same value the reading measured in step 4.

Note: There are three adjustment points of L3110.
After adjustment, make sure that the set movements is normal.
If necessary, set L3110 to the other adjustment points so that the set movements is normal.

PCB-NICAM (COMPONENT SIDE)

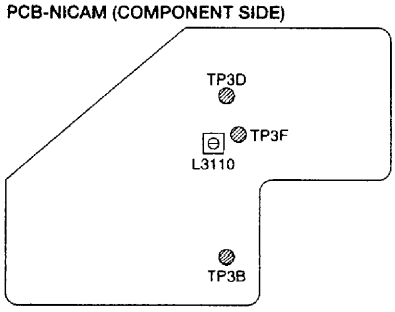

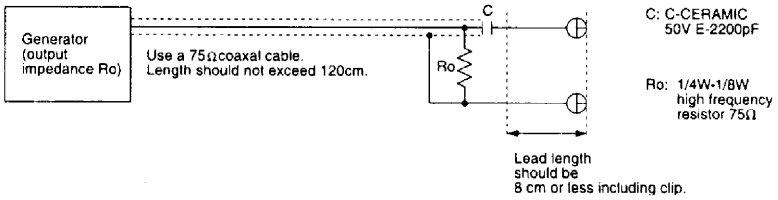

2. Audio Detection Coil	**Adjustment purpose** Detect audio signal to optimum. **Symptom when incorrectly adjusted** Normal audio poor or distorted.

Measuring instrument	Oscilloscope
Test point	TP3G
EXT trigger	---
Measurement range	DIV 50mV TIM 1ms
Input signal	RF signal (Normal audio)
Input terminal	RF IN terminal

1. Supply an RF signal of normal audio (400Hz, 30% MOD).
2. Observe the waveform at TP3G.
3. Adjust L3111 so that the centre level of the amplitude is DC5V.

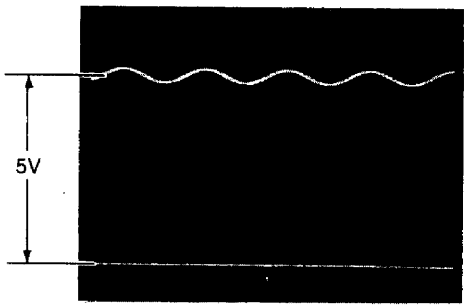

PCB-NICAM (COMPONENT SIDE)

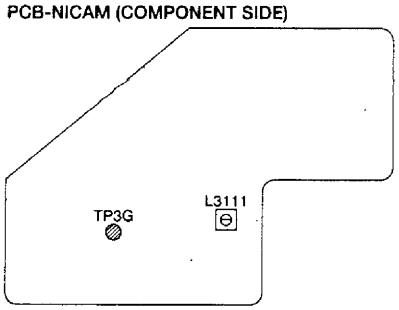

[VIF circuit] 3. RF AGC	**Adjustment purpose**	The best receiving condition of RF signal.
	Symptom when incorrectly adjusted	Poor S/N ratio or cross modulation.

Measuring instrument	---
Test point	---
EXT trigger	---
Measurement range	---
Input signal	RF signal (Programme)
Input terminal	RF IN terminal

1. Supply an RF signal(Programme).
2. Turn on AFT.
3. Adjust VR101 so that the picture and sound have no beat, noise and inter-modulation distortion.

ВНИМАНИЕ!!!Эта схема НЕ предназначена для продажи на дисках.Схему можно свободно получить на сайте "www.radiolom.by.ru"(www.hot.ee/juden001/).Если Вы её купили на болванке,то Вас капитально наебли!Не поддерживайте этих пидоров-торговцев краденным!!!
WARNING!!!This scheme not for selling on CD,its possible liberally get on put www.radiolom.by.ru.If You have sold this scheme on CD,that You have well defrauded.Do Not buy the thieved belongings!The Death thief!

PCB-MAIN (COMPONENT SIDE)

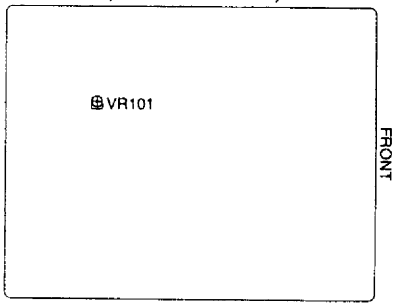

[Power circuit] 4. B4 Voltage	**Adjustment purpose**	The best value of power supply voltage for horizontal deflection circuit.
	Symptom when incorrectly adjusted	Too bright or too dark picture. Too compressed or too expanded horizontal width of picture.

Measuring instrument	DC Voltmeter
Test point	+ lead : TP9A – lead : TP9B
EXT trigger	---
Measurement range	---
Input signal	RF signal (Programme)
Input terminal	RF IN terminal

1. Supply an RF signal (Programme).
2. Observe the voltage at TP9A and TP9B (Plus lead to TP9A).
3. Adjust VR951 so that the voltage is a value listed in the table below.

	21 inch	25 inch
Voltage Value	122 ± 3V	145 ± 1V

PCB-MAIN (COMPONENT SIDE)

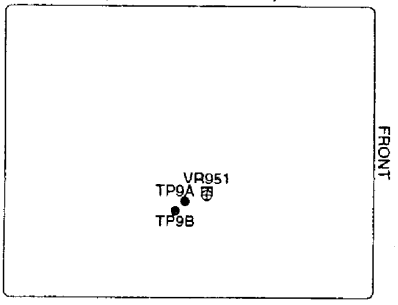

[CRT circuit] 5. Cut Off, White	**Adjustment purpose**	Rate of electron beam shot from each electron gun of R, G and B.
	Symptom when incorrectly adjusted	Too dark or too bright picture.

Measuring instrument	Oscilloscope
Test point	collector of Q651
EXT trigger	---
Measurement range	DIV 5V TIM 20μs
Input signal	---
Input terminal	---

* This adjustment must follow the Purity and Convergence adjustments.
* Preheat the set for twenty minutes or more.
* Adjustment Item 12 (Sub Cont) must be performed immediately after this one.

1. Set the no signal condition in AV mode.
2. Set VR651, VR652 and VR653 to the mechanical centre position.
3. Set VR654, VR655 and VR201 to the mechanical centre position.
4. Observe the waveform at the collector of Q651.(Use GA connector pin ② for ground.)
5. Adjust VR651 so that the pedestal level is 150V.

6. Observe the waveform at the collector of Q652.(Use GA connector pin ② for ground.)
7. Adjust VR652 so that the pedestal level is 150V.
8. Observe the waveform at the collector of Q653.(Use GA connector pin ② for ground.)
9. Adjust VR653 so that the pedestal level is 150V.

PCB-MAIN (COMPONENT SIDE)

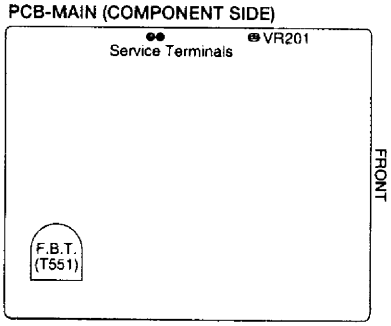

PCB-CRT (SOLDER SIDE)

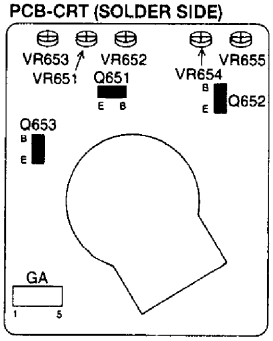

10. Short - circut the service terminals.
11. Adjust SCREEN control on F.B.T. to the point where one red, green or blue line becomes just visible.
12. Adjust two of VR651, VR652 and VR653 so that the horizontal line is white.
13. Open the service terminals.
14. Supply a video signal (White raster).
15. Adjust VR654 and VR 655 so that the entire screen is pure white.

6. Focus	**Adjustment purpose**	Sharpness of picture.
	Symptom when incorrectly adjusted	Poor sharpness of picture.

Measuring instrument	---
Test point	---
EXT trigger	---
Measurement range	---
Input signal	RF signal (Programme)
Input terminal	RF IN terminal

1. Supply an RF signal(Programme).
2. Adjust FOCUS volume on F.B.T. to the best overall focus.

ВНИМАНИЕ!!!Эта схема НЕ предназначена для продажи на дисках.Схему можно свободно получить на сайте "www.radiolom.by.ru"(www.hot.ee/juden001/).Если Вы её купили на болванке,то Вас капитально наебли!Не поддерживайте этих пидоров-торговцев краденным!!!
WARNING!!!This scheme not for selling on CD,its possible liberally get on put www.radiolom.by.ru.If You have sold this scheme on CD,that You have well defrauded.Do Not buy the thieved belongings!The Death thief!

PCB-MAIN (COMPONENT SIDE)

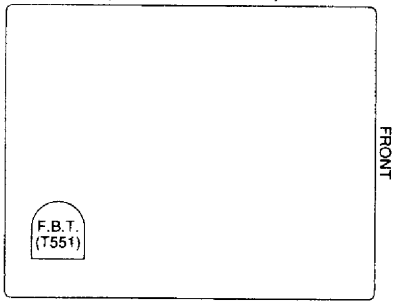

7. Black Level	**Adjustment purpose**	Black level of video signal.
	Symptom when incorrectly adjusted	Too bright or too dark picture.

Measuring instrument	---
Test point	---
EXT trigger	---
Measurement range	---
Input signal	Video signal (Colour bar)
Input terminal	VIDEO IN terminal

1. Supply a video signal (Colour bar).
2. Set COLOUR control to minimum.
3. Make sure that the blue bar area does not brighten.
   If necessary, adjust SCREEN control on FBT so that the blue bar area does not brighten.
4. Make sure that the red bar area is slightly bright.
   If necessary, adjust SCREEN control on FBT so that the red bar area is slightly bright.

PCB–MAIN (COMPONENT SIDE)

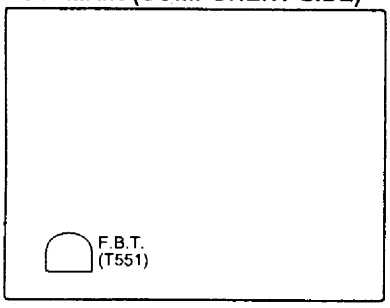

[Deflection circuit] 8. Horizontal Centre	**Adjustment purpose**	Horizontal position of picture.
	Symptom when incorrectly adjusted	Picture too shifted to the left, or the right.

Measuring instrument	---
Test point	---
EXT trigger	---
Measurement range	---
Input signal	Video signal (Monoscope)
Input terminal	VIDEO IN terminal

1. Supply a video signal (Monoscope).
2. Adjust VR531 so that readings of left and right markers are the same.

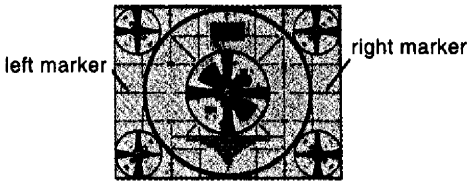

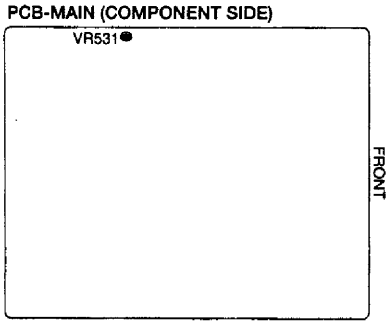

9. East West PCC (25" model only)	**Adjustment purpose**	Horizontal linearity of picture.
	Symptom when incorrectly adjusted	Horizontal distortion of picture.

Measuring instrument	---
Test point	---
EXT trigger	---
Measurement range	---
Input signal	Video signal (Crosshatch)
Input terminal	VIDEO IN terminal

1. Supply a video signal (Crosshatch).
2. Press OPTIMUM button on the remote hand unit.
3. Observing the second line from both ends on the screen.
   Adjust VR5E1 so that the upper and lower distortions are symmetrical.
4. Adjust VR5E2 so that the both vertical lines are straight.
   Repeat step 3 to 4 above, if necessarly.

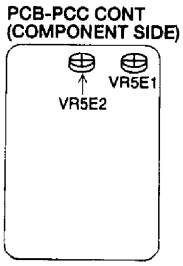

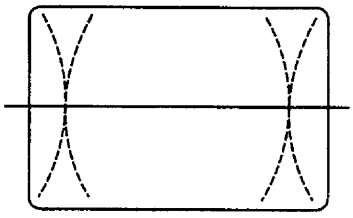

VR5E1

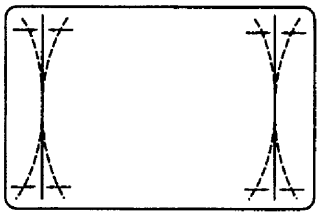

VR5E2

10. Horizontal Width (25" model only)	**Adjustment purpose**	Horizontal width of picture.
	Symptom when incorrectly adjusted	Too compressed or too expanded horizontal width of picture.

Measuring instrument	---
Test point	---
EXT trigger	---
Measurement range	---
Input signal	Video signal (Monoscope)
Input terminal	VIDEO IN terminal

1. Supply a video signal (Monoscope).
2. Press OPTIMUM button on the remote hand unit.
3. Adjust VR5E3 so that the sum of left and right markers is 4.5 ~ 5.8 (equivalent to 7 ~ 9% overscan).

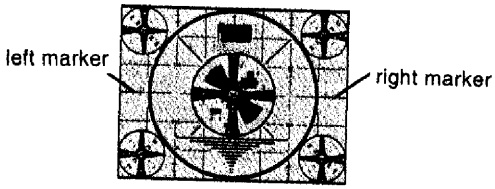

PCB-PCC CONT (COMPONENT SIDE)

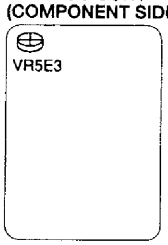

11. Vertical Height, Vertical Linearity, Vertical Centre	**Adjustment purpose**	Vertical and linearity of picture.
	Symptom when incorrectly adjusted	Too compressed or too expanded vertical height of picture. Vertical linearity of picture.

Measuring instrument	---
Test point	---
EXT trigger	---
Measurement range	---
Input signal	Video signal (Monoscope)
Input terminal	VIDEO IN terminal

1. Supply a video signal (Monoscope).
2. Press OPTIMUM button on the remote hand unit.
3. Adjust VR452 for approx. 90% vertical size of raster.
4. Adjust VR451 for symmetry of vertical linearity.
5. Adjust VR452 so that the largest circle is a complete round.
6. Adjust S451 so that the largest circle is vertical centre position.

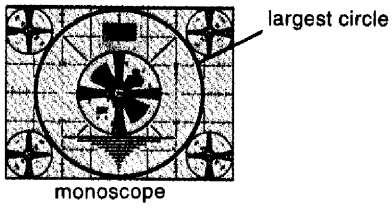

PCB-MAIN (COMPONENT SIDE)

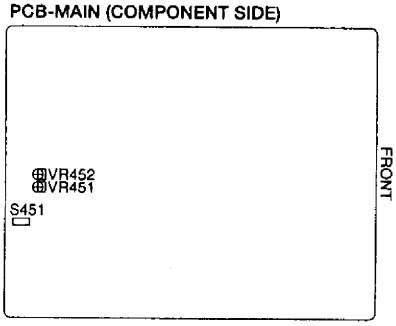

[Video circuit] 12. Sub Cont	**Adjustment purpose**	The best value of beam current.
	Symptom when incorrectly adjusted	Too bright or too dark picture.

Measuring instrument	DC milliammeter
Test point	+lead :TPconnector pin① −lead :TPconnector pin②
EXT trigger	---
Measurement range	---
Input signal	Video signal (Colour bar)
Input terminal	VIDEO IN terminal

* Preheat the set for twenty minutes or more.

1. Supply a video signal (Colour bar).
2. Press OPTIMUM button on the remote hand unit.
3. Observe the beam current values at TP connector pin ① and pin ②. (Plus lead to pin ①)
4. Adjust VR201 so that the beam current is a value listed in the table below.

	21 inch	25 inch
Beam Current	875±20μA	1030±20μA

PCB-MAIN (COMPONENT SIDE)

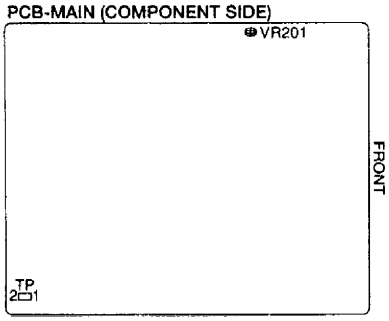

ВНИМАНИЕ!!!Эта схема НЕ предназначена для продажи на дисках.Схему можно свободно получить на сайте "www.radiolom.by.ru"(www.hot.ee/juden001/).Если Вы её купили на болванке,то Вас капитально наебли!Не поддерживайте этих пидоров-торговцев краденным!!!
WARNING!!!This scheme not for selling on CD,its possible liberally get on put www.radiolom.by.ru.If You have sold this scheme on CD,that You have well defrauded.Do Not buy the thieved belongings!The Death thief!

PARTS LIST

MODEL : CT-21A5LST/CT-21A5STX/CT-25A5STX

In order to expedite delivery of replacement part orders.

Specify : 1.Model number/Serial number

2.Part number and Description

3.Quantity

Unless full information is supplied,delay in execution of orders will result.

⚠ : Critical components

MARK	B	C	D	F	G	J	K
TOLERANCE (%)	±0.1	±0.25	±0.5	±1	±2	±5	±10

MARK	M	N	V	X	Z	P	Q
TOLERANCE (%)	±20	±30	+10 -10	+40 -20	+80 -20	+100 -0	+30 -10

MARK	B	C	D	F	G
TOLERANCE (pF)	±0.1	±0.25	±0.5	±1	±2

ABBREVIATION

[21LST]:CT-21A5LST

[21STX]:CT-21A5STX

[25STX]:CT-25A5STX

[21LST]:CT-21A5LST [21STX]:CT-21A5STX [25STX]:CT-25A5STX

SYMBOL No.	PARTS No.	PARTS NAME	DESCRIPTION
		TUBES	
⚠ V 271	255P801O10	CRT ASSY	A51EAL55X01[21LST,21STX]
⚠ V 271	255P930O10	CRT ASSY	A59ECY13X01[25STX]
		INTEGRATED CIRCUITS	
IC101	272P847O20	IC	TDA8361
IC2J1	272P575O10	IC	CXA1114P
IC361	272P459O20	IC	TA8200AH
IC3J1	272P942O10	IC	TA8776N
IC3101	270P068O10	IC	LA7555
IC3102	274P340O10	IC	TDA8205
IC3103	274P339O10	IC	TDA8204
IC3105	272P785O10	IC	μPC78M09AHF
IC3106	266P922O20	IC	μPC78M05H
IC3107	266P982O10	IC	AN608P
IC451	266P405O10	IC	AN5521
IC5E1	272P406O10	IC	TEA2031A[25STX]
IC601	272P848O10	IC	TDA4661
IC701	274P336O10	IC	P83CL168
IC702	263P434O20	IC	X24C04P
IC703	266P010O20	IC	μPC574J-K
IC7701	263P622O20	IC	HM6264ALSP10/12
IC7702	274P050O20	IC	SAA5246AP
IC7703	272P027O10	IC	AN5862K
IC7704	272P400O10	IC	NJM2233BL
IC901	272P514O10	IC	TEA2261
IC951	267P076O10	IC	SI-3120C
IC952	266P922O10	IC	μPC78M05H
IC954	272P856O10	IC	μPC78M08AHF
IC955	272P502O10	IC	μPC2412HF
		TRANSISTORS	
Q 111	260P543O30	TRANSISTOR	JC501-R
Q 112	260P543O30	TRANSISTOR	JC501-R
Q 201	260P543O30	TRANSISTOR	JC501-R
Q 202	260P543O30	TRANSISTOR	JC501-R
Q 203	260P544O40	TRANSISTOR	JA101-R
Q 261	260P544O40	TRANSISTOR	JA101-R
Q 2J1	260P543O30	TRANSISTOR	JC501-R
Q 2J2	260P543O30	TRANSISTOR	JC501-R
Q 2J3	260P543O30	TRANSISTOR	JC501-R
Q 2J4	260P543O30	TRANSISTOR	JC501-R
Q 2J5	260P387O30	TRANSISTOR	2SC2236-Y
Q 361	260P544O40	TRANSISTOR	JA101-R
Q 3101	260P356O10	TRANSISTOR	2SC1906
Q 3102	260P544O40	TRANSISTOR	JA101-R
Q 3104	260P543O30	TRANSISTOR	JC501-R
Q 3105	260P543O30	TRANSISTOR	JC501-R
Q 3106	260P543O30	TRANSISTOR	JC501-R
Q 401	260P543O30	TRANSISTOR	JC501-R
Q 402	260P543O30	TRANSISTOR	JC501-R
Q 431	260P349O20	TRANSISTOR	2SC1472K-B[25STX]
Q 551	260P576O10	TRANSISTOR	2SD1554[21LST,21STX]
Q 551	260P557O10	TRANSISTOR	2SD1555[25STX]
Q 552	260P422O10	TRANSISTOR	2SC2482
Q 5E1	260P543O30	TRANSISTOR	JC501-R[25STX]
Q 5E2	260P543O30	TRANSISTOR	JC501-R[25STX]
Q 651	260P571O10	TRANSISTOR	2SC3789-D,E
Q 652	260P571O10	TRANSISTOR	2SC3789-D,E
Q 653	260P571O10	TRANSISTOR	2SC3789-D,E
Q 654	260P544O40	TRANSISTOR	JA101-R
Q 702	260P544O40	TRANSISTOR	JA101-R
Q 703	260P544O40	TRANSISTOR	JA101-R
Q 704	260P544O40	TRANSISTOR	JA101-R
Q 705	260P543O30	TRANSISTOR	JC501-R
Q 706	260P543O30	TRANSISTOR	JC501-R
Q 707	260P543O30	TRANSISTOR	JC501-R
Q 7701	260P543O30	TRANSISTOR	JC501-R
Q 7702	260P543O30	TRANSISTOR	JC501-R
Q 7703	260P543O30	TRANSISTOR	JC501-R
Q 7707	260P543O30	TRANSISTOR	JC501-R
Q 901	260P572O10	TRANSISTOR	2SD1556
Q 902	260P543O30	TRANSISTOR	JC501-R
Q 953	260P543O30	TRANSISTOR	JC501-R
Q 954	260P668O10	TRANSISTOR	2SB1135-R,S
Q 955	260P325O30	TRANSISTOR	2SC2655-Y
Q 975	260P544O40	TRANSISTOR	JA101-R
		DIODES	
D 102	264P370O10	DIODE	1N4148
D 231	264P483O80	DIODE	RD5.1FB2
D 232	264P483O80	DIODE	RD5.1FB2
D 233	264P483O80	DIODE	RD5.1FB2
D 234	264P483O80	DIODE	RD5.1FB2
D 235	264P483O80	DIODE	RD5.1FB2
D 251	264P483O80	DIODE	RD5.1FB2
D 252	264P483O80	DIODE	RD5.1FB2
D 253	264P483O80	DIODE	RD5.1FB2
D 280	264P462O90	DIODE	RD7.5EB3
D 281	264P462O90	DIODE	RD7.5EB3
D 282	264P462O90	DIODE	RD7.5EB3
D 2J1	264P464O30	DIODE	RD10EB2
D 361	264P370O10	DIODE	1N4148
D 362	264P370O10	DIODE	1N4148
D 363	264P370O10	DIODE	1N4148
D 364	264P370O10	DIODE	1N4148
D 365	264P463O20	DIODE	RD8.2EB2
D 451	264P371O10	DIODE	BYD33G
D 452	264P371O10	DIODE	BYD33G
D 453	264P371O10	DIODE	BYD33G
D 531	264P370O10	DIODE	1N4148
D 551	264P533O30	DIODE	RS 4FS[25STX]
D 552	264P358O70	DIODE	RU 4AM[25STX]
D 553	264P371O10	DIODE	BYD33G
D 554	264P463O20	DIODE	RD8.2EB2
D 555	264P371O10	DIODE	BYD33G
D 556	264P371O10	DIODE	BYD33G
D 557	264P456O60	DIODE	RD2.2EB2[21LST,25STX]
D 557	264P465O10	DIODE	RD12EB1[21STX]
D 558	264P371O10	DIODE	BYD33G
D 559	264P463O60	DIODE	RD9.1EB1
D 563	264P370O10	DIODE	1N4148
D 5E1	264P370O10	DIODE	1N4148[25STX]
L 111	325C120O10	PEAKING COIL	1.0μH-M
L 112	325C161O30	PEAKING COIL	10μH-K
L 113	325C160O60	PEAKING COIL	22μH-K[21LST,25STX]
L 113	325C110O60	PEAKING COIL	22μH-K[21STX]
⚠ T 901	350P597O20	POWER	[25STX]
SP391	480P025O10	SPEAKER	WITH BACK COVER

[21LST]:CT-21A5LST [21STX]:CT-21A5STX [25STX]:CT-25A5STX

SYMBOL No.	PARTS No.	PARTS NAME	DESCRIPTION
D 5E2	264P467O80	DIODE	RD20EB3[25STX]
D 601	264P483O80	DIODE	RD5.1FB2
D 651	264P370O10	DIODE	1N4148
D 653	264P371O10	DIODE	BYD33G
D 701	264P370O10	DIODE	1N4148[21LST]
D 702	264P370O10	DIODE	1N4148[21LST]
D 710	264P370O10	DIODE	1N4148
D 711	264P370O10	DIODE	1N4148
D 712	264P370O10	DIODE	1N4148
D 713	264P370O10	DIODE	1N4148
D 714	264P370O10	DIODE	1N4148
D 7E1	264P584O20	LIGHT EMITTING DIODE	SML1216W-C,D
D 7701	264P370O10	DIODE	1N4148
D 7702	264P370O10	DIODE	1N4148
D 7703	264P370O10	DIODE	1N4148
D 7704	264P370O10	DIODE	1N4148
D 901	264P376O10	DIODE	BYW56
D 902	264P376O10	DIODE	BYW56
D 903	264P376O10	DIODE	BYW56
D 904	264P376O10	DIODE	BYW56
D 905	264P371O10	DIODE	BYD33G
D 906	264P372O10	DIODE	BYV96E
D 907	264P481O60	DIODE	RD3.0FB2
D 908	264P370O10	DIODE	1N4148
D 909	264P481O60	DIODE	RD3.0FB2
D 951	264P358O70	DIODE	RU 4AM
D 952	264P377O10	DIODE	BYW95B
D 953	264P377O10	DIODE	BYW95B
D 954	264P377O10	DIODE	BYW95B
D 955	264P461O80	DIODE	RD6.2EB3
D 956	264P370O10	DIODE	1N4148
D 960	264P377O10	DIODE	BYW95B
D 961	264P370O10	DIODE	1N4148
		OTHER SEMICONDUCTORS	
⚠ RP991	265P071O50	POSITIVE THERMISTOR	<180N>
TH531	269P020O10	THYRISTOR	N13T1
		FILTERS	
CF111	296P024O40	CERAMIC TRAP	TPS6.0MB
CF3101	296P014O30	CERAMIC FILTER	SFE-6.0MHz
CF3103	296P014O30	CERAMIC FILTER	SFE-6.0MHz
LC3101	409P453O10	BAND PASS FILTER	
SF101	296P088O50	SAW FILTER	KAF-39.5MR-MJ
SF3101	296P112O20	SAW FILTER	SAF32.9MDE70Z
		COILS	
⚠	409B099O10	DEGAUSSING COIL	[21LST,21STX]
⚠	409B041O80	DEGAUSSING COIL	[25STX]
L 101	325C114O30	PEAKING COIL	LAL03NAR22M
L 104	323P175O20	VIF COIL	38.9 39.5MHz
L 105	321C041O50	RF COIL	JISC-3212-0.4
L 111	325C120O10	PEAKING COIL	1.0μH-M
L 112	325C161O30	PEAKING COIL	10μH-K
L 113	325C160O50	PEAKING COIL	2.2μH-K[21LST,25STX]
L 113	325C110O50	PEAKING COIL	2.2μH-K[21STX]

SYMBOL No.	PARTS No.	PARTS NAME	DESCRIPTION
L 114	325C162O00	PEAKING COIL	39μH-K
L 151	325C121O30	PEAKING COIL	10μH-K
L 152	325C121O30	PEAKING COIL	10μH-K
L 201	325C122O50	PEAKING COIL	100μH-K
L 2J1	325C110O10	PEAKING COIL	1.0μH-K
L 2J2	325C110O10	PEAKING COIL	1.0μH-K
L 3K1	325C110O10	PEAKING COIL	1.0μH-K
L 3101	325C122O30	PEAKING COIL	68μH-K
L 3102	325C120O40	PEAKING COIL	1.8μH-M/K
L 3103	325C122O30	PEAKING COIL	68μH-K
L 3104	325C122O30	PEAKING COIL	68μH-K
L 3105	325C121O30	PEAKING COIL	10μH-K
L 3106	325C121O30	PEAKING COIL	10μH-K
L 3107	325C121O30	PEAKING COIL	10μH-K
L 3108	325C113O20	PEAKING COIL	390μH-K
L 3109	325C113O20	PEAKING COIL	390μH-K
L 3110	323P184O10	VIF COIL	
L 3111	327P074O10	SIF COIL	5.5/6.0MHz
L 531	325C120O10	PEAKING COIL	1.0μH-M
L 532	325C120O10	PEAKING COIL	1.0μH-M
L 551	321C030O10	RF COIL	1.0μH-K
L 552	411D009O20	FERRITE CORE FILTER	
L 553	333P012O30	H-LIN. COIL	[21LST,21STX]
L 553	333P012O10	H-LIN. COIL	[25STX]
L 554	409P748O10	PCC COIL	1MHz[25STX]
L 555	409P749O10	CHOKE COIL	15MHz[25STX]
L 5E1	325C302O00	PEAKING COIL	39μH-K[25STX]
L 701	325C121O30	PEAKING COIL	10μH-K
L 702	325C121O30	PEAKING COIL	10μH-K
L 703	325C121O30	PEAKING COIL	10μH-K
L 704	325C121O30	PEAKING COIL	10μH-K
L 705	325C120O10	PEAKING COIL	1.0μH-M
L 706	325C120O10	PEAKING COIL	1.0μH-M
L 707	325C120O10	PEAKING COIL	1.0μH-M
L 7701	325C121O30	PEAKING COIL	10μH-K
L 7702	325C110O90	PEAKING COIL	4.7μH-K
L 7703	325C121O30	PEAKING COIL	10μH-K
L 7704	321C031O40	RF COIL	10μH-K
L 7705	325C121O30	PEAKING COIL	10μH-K
L 901	325C121O10	PEAKING COIL	6.8μH-K
L 902	321C030O50	RF COIL	2.2μH-K
L 903	411P001O70	FERRITE LEAD	BF60T
L 905	411P001O70	FERRITE LEAD	BF60T
L 951	325D059O60	PEAKING COIL	390μH-K
L 952	409P674O10	FILTER COIL	
L 953	409P674O10	FILTER COIL	
L 992	351P044O10	LINE FILTER	AT4043/90
L 997	351P011O20	LINE FILTER	700MHz
		TRANSFORMERS	
⚠ T 551	334P220O20	FLYBACK	[21LST,21STX]
T 552	336P017O10	H.DRIVE	
⚠ T 901	350P597O10	POWER	[21LST,21STX]
⚠ T 901	350P597O20	POWER	[25STX]

[21LST]:CT-21A5LST [21STX]:CT-21A5STX [25STX]:CT-25A5STX

SYMBOL No.	PARTS No.	PARTS NAME	DESCRIPTION
		VARIABLE RESISTORS	
VR101	127C380O80	VR-SEMIFIXED	1/5W B10KΩ-M
VR201	127C181O20	VR-SEMIFIXED	1/5W B100KΩ-M
VR451	127C380O70	VR-SEMIFIXED	1/5W B5KΩ-M[25STX]
VR452	127C380O10	VR-SEMIFIXED	1/5W B200Ω-M
VR531	127C180O80	VR-SEMIFIXED	1/10W B10KΩ-M
VR5E1	127C180O60	VR-SEMIFIXED	1/5W B3KΩ-M[25STX]
VR5E2	127C181O50	VR-SEMIFIXED	1/5W B500KΩ-M[25STX]
VR5E3	127C190O50	VR-SEMIFIXED	1/5W B2KΩ-M[25STX]
VR651	127C180O10	VR-SEMIFIXED	1/5W B200Ω-M
VR652	127C180O10	VR-SEMIFIXED	1/5W B200Ω-M
VR653	127C180O10	VR-SEMIFIXED	1/5W B200Ω-M
VR654	127C180O40	VR-SEMIFIXED	1/5W B1KΩ-M
VR655	127C180O40	VR-SEMIFIXED	1/5W B1KΩ-M
VR951	127C380O80	VR-SEMIFIXED	1/5W B10KΩ-M[21LST,21STX]
VR951	127C380O90	VR-SEMIFIXED	1/5W B20KΩ-M[25STX]
		RESISTORS	
⚠ R 361	103P398O40	FUSE	1/2W 2.2Ω-J
⚠ R 362	103P398O40	FUSE	1/2W 2.2Ω-J
⚠ R 456	103P378O40	FUSE	1/4W 2.2Ω-J
R 554	102P243O20	CEMENT METAL	5W 3.9KΩ-K/J
R 557	102P220O10	CEMENT WIRE	10W 10Ω-K/J
⚠ R 558	103P442O50	FUSE METAL	1W 1KΩ-K/J
⚠ R 559	103P397O90	FUSE	1/2W 0.82Ω-J[21LST,21STX]
⚠ R 561	103P397O90	FUSE	1/2W 0.82Ω-J
⚠ R 566	103P378O00	FUSE	1/4W 1.0Ω-J
⚠ R 671	103P437O80	FUSE METAL	2W 0.68Ω-K/J[25STX]
⚠ R 681	103P448O40	FUSE METAL	1W 2.2Ω-K/J[21LST,21STX]
R 7B5	109D021O20	COMPOSITION	1/2W 6.8MΩ-K
R 921	109D074O10	CEMENT METAL	5W 1.8KΩ-K-/J
⚠ R 981	109D021O20	COMPOSITION	1/2W 6.8MΩ-K
⚠ R 982	109D021O20	COMPOSITION	1/2W 6.8MΩ-K
R 993	102P081O40	CEMENT WIRE	7W 4.7Ω-K
		CAPACITORS AND TRIMMERS	
C 556	172P171O60	C-M-PP	1600V 0.018μF-J[25STX]
C 904	185D064O30	ELECTROLYTIC-C	H450V 150μF-M
⚠ C 981	189P091O10	CERAMIC CAPACITOR	AC400V E4700pF-M
⚠ C 991	189P117O30	C-M-P-AC	AC250V 0.22μF-M
		SWITCHES	
S 451	434C021O10	LEVER SWITCH	1-3
S 701	432P066O30	KEY BOARD SWITCH	1-1 L=8.35 S
S 702	432P066O30	KEY BOARD SWITCH	1-1 L=8.35 S
S 703	432P066O30	KEY BOARD SWITCH	1-1 L=8.35 S
S 706	432P066O30	KEY BOARD SWITCH	1-1 L=8.35 S
⚠ S 991	432C048O10	PUSH SWITCH	AC250V 5A/80A
		MISCELLANEOUS	
⚠	449C081O10	CRT SOCKET	
⚠ F 991	283D091O40	FUSE	T2A H250V
J 361	451C174O10	MICROPHONE JACK	
⚠ PC951	268P068O10	PHOTO COUPLER	TCDT1124G
SP391	480P025O10	SPEAKER	WITH BACK COVER

SYMBOL No.	PARTS No.	PARTS NAME	DESCRIPTION
SP392	480P025O10	SPEAKER	WITH BACK COVER
SP393	480P026O10	SPEAKER	WITH FRONT
SP394	480P026O10	SPEAKER	WITH FRONT
TU101	295P400O50	TUNER	ENV59888G3[21LST]
TU101	295P400O10	TUNER	ENV87867G3[21STX,25STX]
X 3101	285P154O10	CRYSTAL RESONATOR	11.648MHz
X 601	285P132O20	CRYSTAL RESONATOR	TDA8362
X 701	285P139O30	CRYSTAL RESONATOR	12MHz
X 7701	285P157O10	CRYSTAL RESONATOR	27MHz
⚠ Z 551	299P087O80	SURGE PROTECTOR	PRF 3150[25STX]
Z 7E1	939P226O20	PREAMP UNIT	SBX160-45
⚠ Z 951	299P087O80	SURGE PROTECTOR	PRF 3150
⚠ Z 953	299P132O10	SURGE PROTECTOR	PRF 5000
		PRINTED CIRCUIT BOARD ASSY'S	
⚠	930C758O01	AV PCB ASSY	
⚠	930C759O02	CRT PCB ASSY	[21LST,21STX]
⚠	930C759O01	CRT PCB ASSY	[25STX]
⚠	930C757O01	LED-P PCB ASSY	
⚠	920A404O03	MAIN PCB ASSY	[21LST]
⚠	920A404O01	MAIN PCB ASSY	[21STX]
⚠	920A404O02	MAIN PCB ASSY	[25STX]
⚠	930C679O01	NICAM PCB ASSY	
⚠	930C760O01	PCC PCB ASSY	[25STX]
⚠	930C756O01	POWER SUB PCB ASSY	
⚠	930C678O01	TEXT PCB ASSY	
		MECHANICAL PARTS	
	669D220O30	SCREW	3X10 46LA005
	669D221O60	SCREW	4X16 46LA005
		COSMETIC PARTS	
⚠	246C162O10	AC POWER CORD	
⚠	700C161O90	BACK COVER	[21LST]
⚠	700C159O10	BACK COVER	[21STX]
⚠	700C161O80	BACK COVER	[25STX]
	704C904O10	BUTTON POWER	[21LST,25STX]
	702C938O90	DOOR	[21LST,25STX]
	761C437O10	DOOR CATCH	
	700A693O10	FRONT CABINET	[21LST,21STX]
	750A017O10	FRONT CABINET	[25STX]
		PACKING PARTS AND ACCESSORY	
	803A342O10	PACKING CUSHION	[21LST,21STX]
	803A354O10	PACKING CUSHION	[25STX]
⚠	872C084O90	INSTRUCTION BOOK	[21LST]
⚠	872C084O70	INSTRUCTION BOOK	[21STX,25STX]
	831D283O10	PACKING BAG	
	831D287O10	PACKING BAG	[21LST,21STX]
	831D287O20	PACKING BAG	[25STX]
	801C227O10	PACKING CASE	[21LST,21STX]
	801C238O10	PACKING CASE	[25STX]
⚠	290P023O10	REMOTE HAND UNIT	

– 14 –

D 5E1	264P370O10	DIODE	1N4148[25STX]
D 563	264P370O10	DIODE	1N4148
D 599	264P463O60	DIODE	RD9.1EB1
D 558	264P371O10	DIODE	BYD33G
D 557	264P466O10	DIODE	RD12EB3[21STX]
D 567	264P466O60	DIODE	RD12EB2[21LST,25STX]
		DIODE	BYD33G
Q 431	260P349O20	TRANSISTOR	2SC1412K-B[25STX]
			JC501-R
Q 551	260P576O10	TRANSISTOR	2SD1554[21LST,21STX]
Q 551	260P555O10	TRANSISTOR	2SD1555[25STX]
Q 552	260P422O10	TRANSISTOR	2SC2482
Q 5E1	260P543O30	TRANSISTOR	JC501-R[25STX]

ВНИМАНИЕ!!!Эта схема НЕ предназначена для продажи на дисках.Схему можно свободно получить на сайте "www.radiolom.by.ru"(www.hot.ee/juden001/).Если Вы её купили на болванке,то Вас капитально наебли!Не поддерживайте этих пидоров-торговцев краденным!!! WARNING!!!This scheme not for selling on CD,its possible liberally get on put www.radiolom.by.ru.If You have sold this scheme on CD,that You have well defrauded.Do Not buy the thieved belongings!The Death thief!

SERVICING PRECAUTION

SYMBOLS INDICATE COMPONENTS HAVING SPECIAL CHARACTERISTICS IMPORTANT TO SAFETY AND PERFORMANCE. THERFORE REPLACEMENT OF ANY SAFETY PARTS SHOULD BE IDENTICAL IN VALUE AND CHARACTERISTICS. FOR ACCURACY OF THE REPLACEMENT REFER TO THE PARTS LIST OF SERVICE MANUAL.
DON'T DEGRADE THE SAFETY OF THE RECEIVERS THROUGH IMPROPER SERVICING.

• NOTE

1. DC voltages were measured from points indicated to the circuit ground with a high-Z voltmeter.
2. Waveforms were taken with standard colour bar signal.
3. TP6A, etc. show Test Points.
4. CAPACITORS

Value		Not indicated	PF, for numbers more than 1 μF, for numbers less than 1
Dielectric Strength		Not indicated :50V	
Tolerance		Not indicated =±10%	No Tolerance is indicated for electrolytic capacitors and ±20% G=±2% J=±5% K=±10% M=±20% P=+100% −0% Z=+80% −20% Q=+30% −10% T=+200% −0% C=±0.25PF D=±0.5PF F=±1PF G=±2PF
Sort	I Parts except for chips		Not indicated : Ceramic capacitor MF : Polyester capacitor PP : Polypropylene film capacitor ALM : Aluminus electrolytic capacitor TF : Twin film capacitor SC : Semiconductor ceramic capacitor MP : Metalized paper MPP : Metalized plastic film capacitor MMF : Metalized polyester capacitor MF PP : Polyester polypropylence film capacitor PS : Styrol capacitor TAN or TANT : Tantalum capacitor —||— : Electrolytic capacitor BP or NP : Non polarized electrolytic capacitor
	II Chips		Not indicated : Ceramic capacitor chip —||— : Electrolytic capacitor BP or NP : Non polarized electrolytic capacitor chip
Characteristic (only ceramic capacitor)		Not indicated : F or B(high dielectric percentage) CH,SL,etc. : Temperature compensating types	

5. Resistors

Value		Not indicated = Ω K = kΩ(1000Ω) M = MΩ(1000kΩ)
Wattage	Parts except for chips	Not indicated = 1/4W or 1/6W
	Chips	Not indicated = 1/10W
Tolerance		Not indicated =±5% D=±0.5% J=±5% F=±1% K=±10%
Short	I Parts except for chips	Not indicated : Carbon resistor S : Fixed composition resistor MB : Metal oxide film resistor(type B) CE : Cemented resister W : Wire wound resister M : Metal film resister MPC : Metal plate cement resister ML : Metal liner resister
	II Chip	Not indicated : Chip resistor

6. This is a basic schematic diagram. Some sets may be subject to modification according to engineering improvement.

SPECIFIC SYMBOL

Zener Diode	Crystal unit
Varicap	Air Gap
Posistor	Part(resistor) attached on the copper-foil side of PCB
Thermistor	Ceramic filter
Fusible Resistor	

ВНИМАНИЕ!!!Эта схема НЕ предназначена для продажи на дисках.Схему можно свободно получить на сайте "www.radiolom.by.ru"(www.hot.ee/juden001/).Если Вы её купили на болванке,то Вас капитально наебли!Не поддерживайте этих пидоров-торговцев краденным!!!
WARNING!!!This scheme not for selling on CD,its possible liberally get on net www.radiolom.by.ru If You

CT-21A5LST
CT-21A5STX
CT-25A5STX

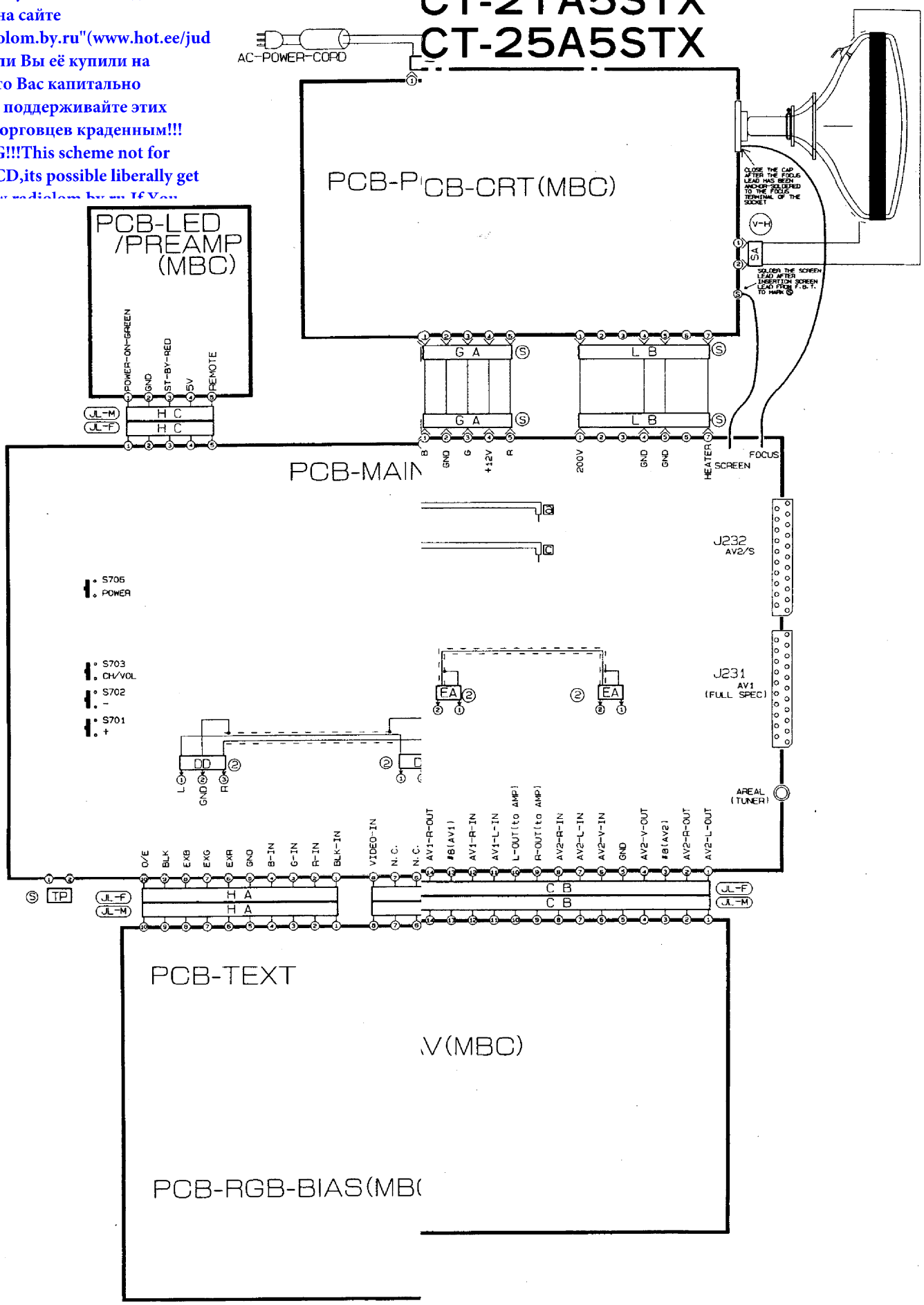

SCHEMATI

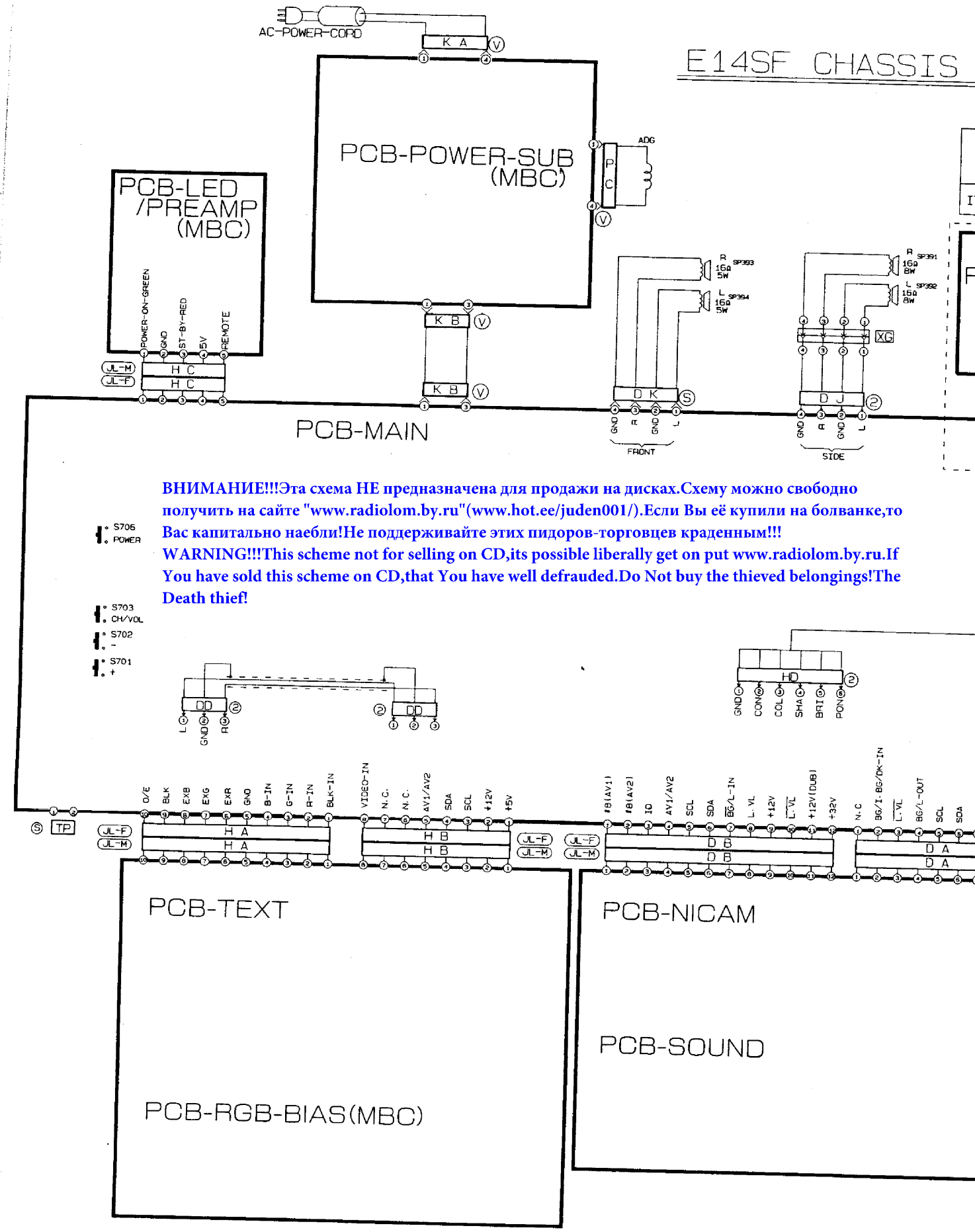

ВНИМАНИЕ!!!Эта схема НЕ предназначена для продажи на дисках.Схему можно свободно получить на сайте "www.radiolom.by.ru"(www.hot.ee/juden001/).Если Вы её купили на болванке,то Вас капитально наебли!Не поддерживайте этих пидоров-торговцев краденным!!!
WARNING!!!This scheme not for selling on CD,its possible liberally get on put www.radiolom.by.ru.If You have sold this scheme on CD,that You have well defrauded.Do Not buy the thieved belongings!The Death thief!

CHEMATIC DIAGRAM MODELS : CT-21A5LST
CT-21A5STX
CT-25A5STX

CHASSIS BLOCK DIAGRAM

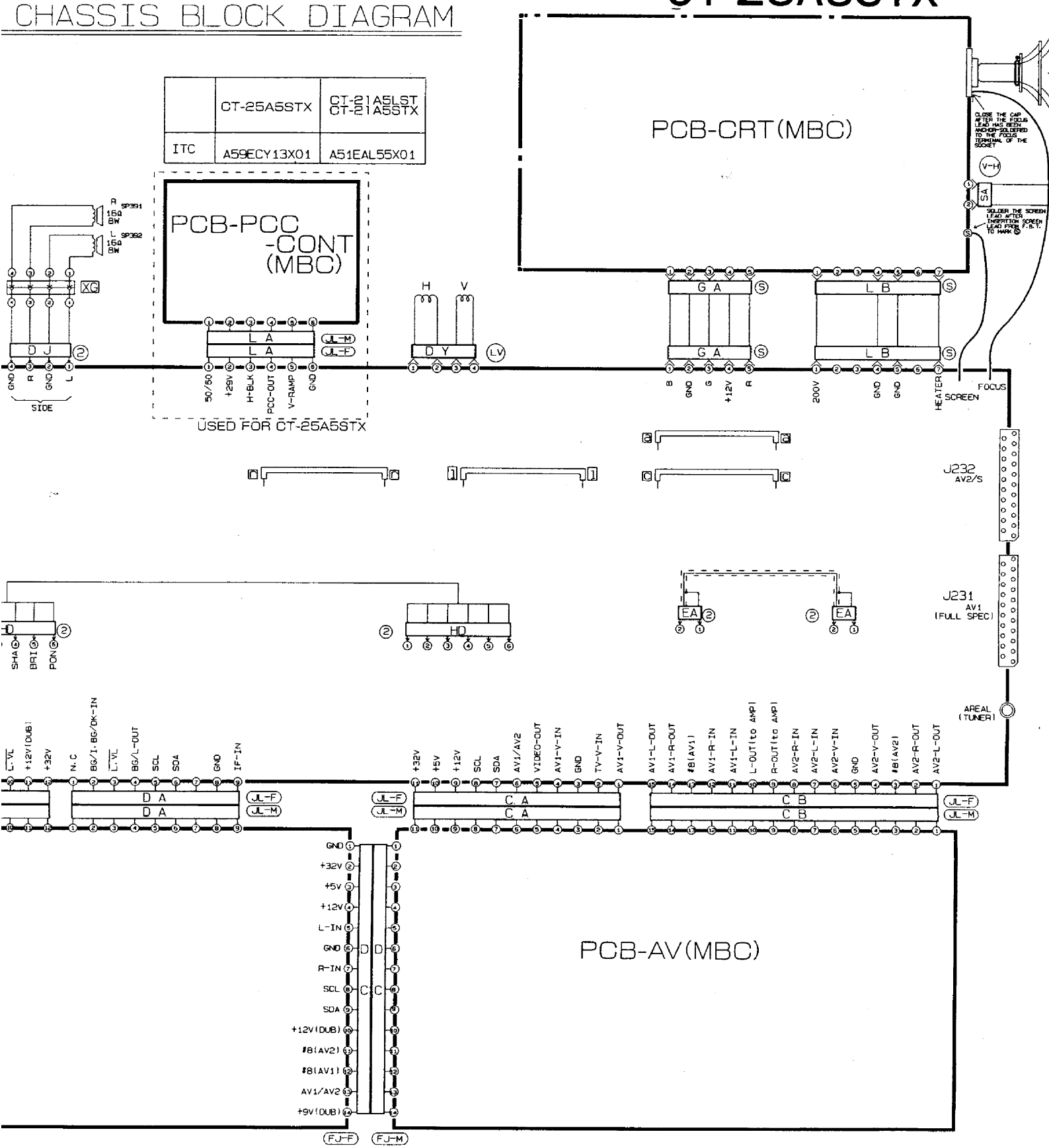

ВНИМАНИЕ!!!Эта схема НЕ предназначена для продажи на дисках.Схему можно свободно получить на сайте "www.radiolom.by.ru"(www.hot.ee/juden001/).Если Вы её купили на болванке,то Вас капитально наебли!Не поддерживайте этих пидоров-торговцев краденным!!! WARNING!!!This scheme not for selling on CD,its possible liberally get on put www.radiolom.by.ru.If You have sold this scheme on CD,that You have well defrauded.Do Not buy the thieved belongings!The Death thief!

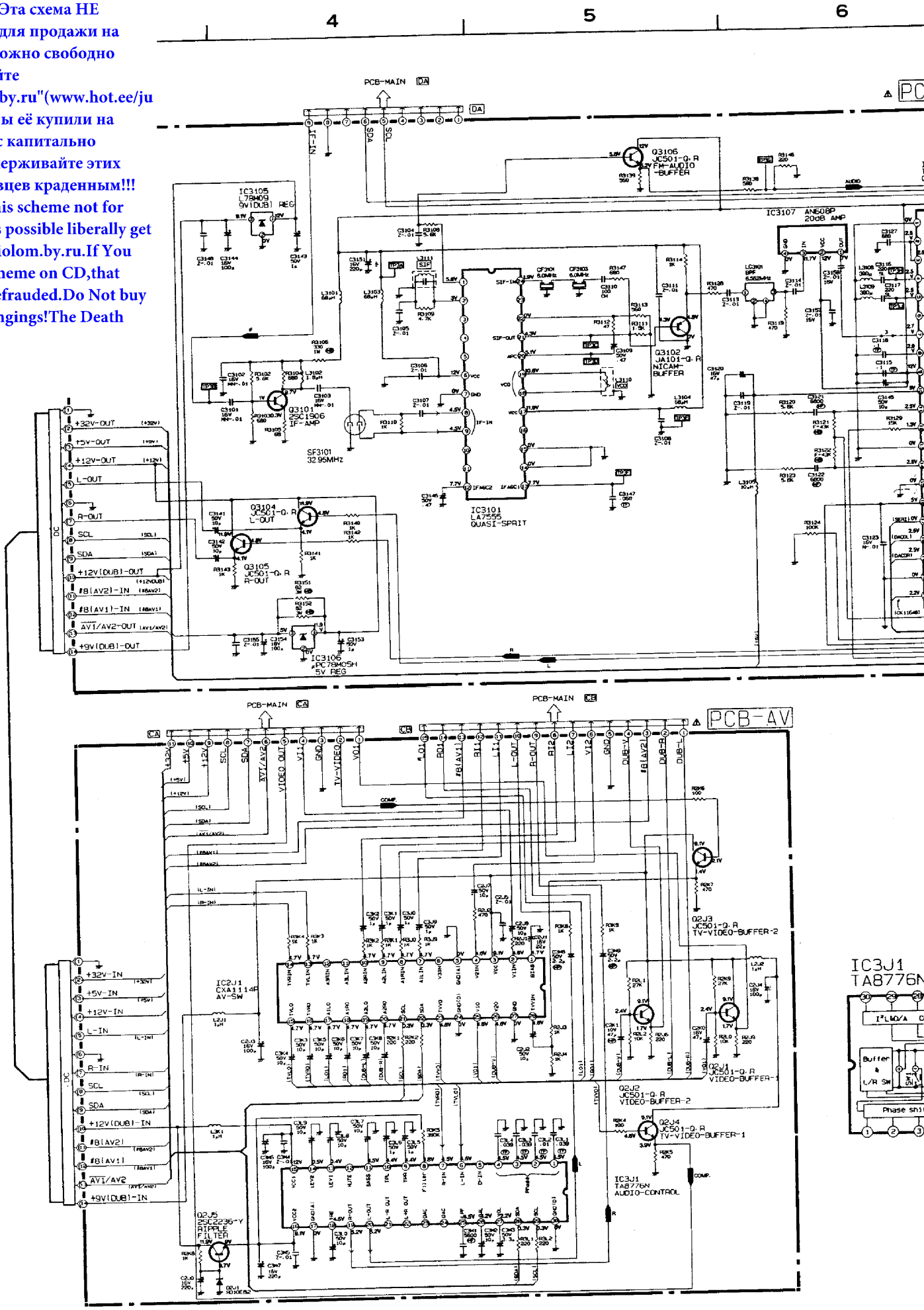

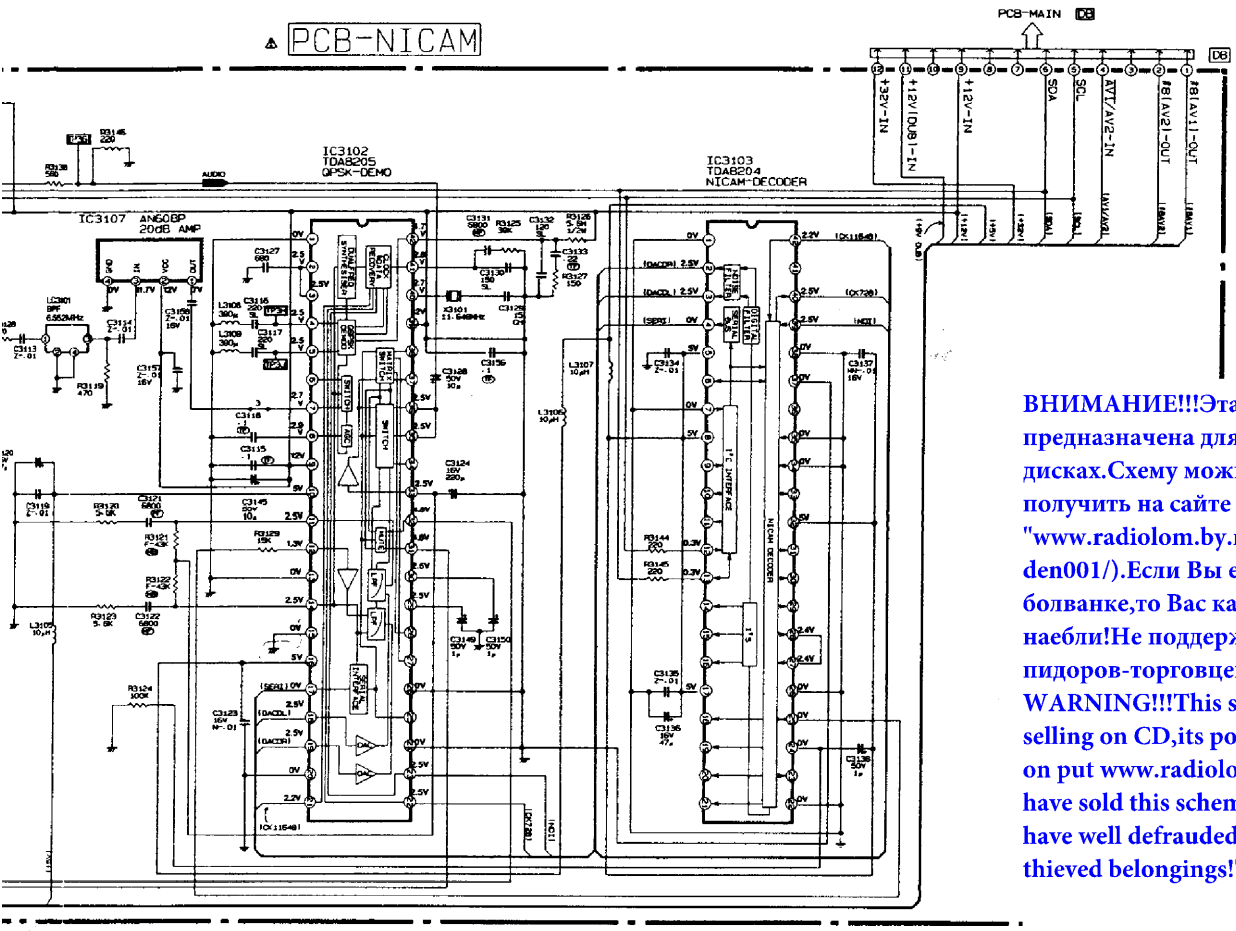

ВНИМАНИЕ!!!Эта схема НЕ предназначена для продажи на дисках.Схему можно свободно получить на сайте "www.radiolom.by.ru"(www.hot.ee/juden001/).Если Вы её купили на болванке,то Вас капитально наебли!Не поддерживайте этих пидоров-торговцев краденным!!! WARNING!!!This scheme not for selling on CD,its possible liberally get on put www.radiolom.by.ru.If You have sold this scheme on CD,that You have well defrauded.Do Not buy the thieved belongings!The Death thief!

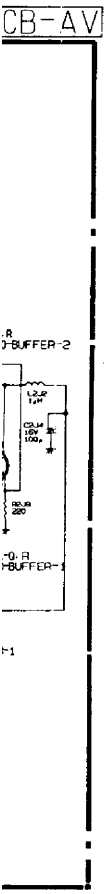

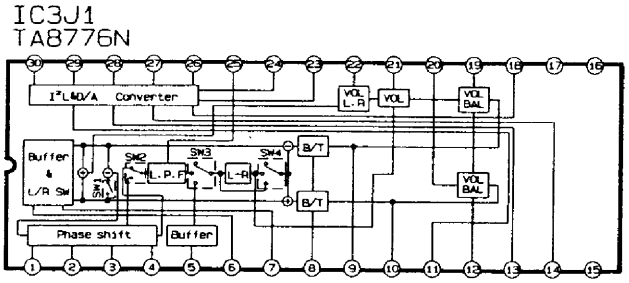

IC3101 LA7555

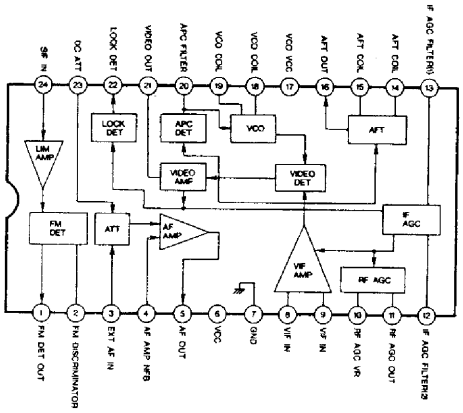

ВНИМАНИЕ!!!Эта схема НЕ предназначена для продажи на дисках.Схему можно свободно получить на сайте "www.radiolom.by.ru"(www.hot.ee/juden001/).Если Вы её купили на болванке,то Вас капитально наебли!Не поддерживайте этих пидоров-торговцев краденным!!!
WARNING!!!This scheme not for selling on CD,its possible liberally get on put www.radiolom.by.ru.If You have sold this scheme on CD,that You have well defrauded.Do Not buy the thieved belongings!The Death thief!

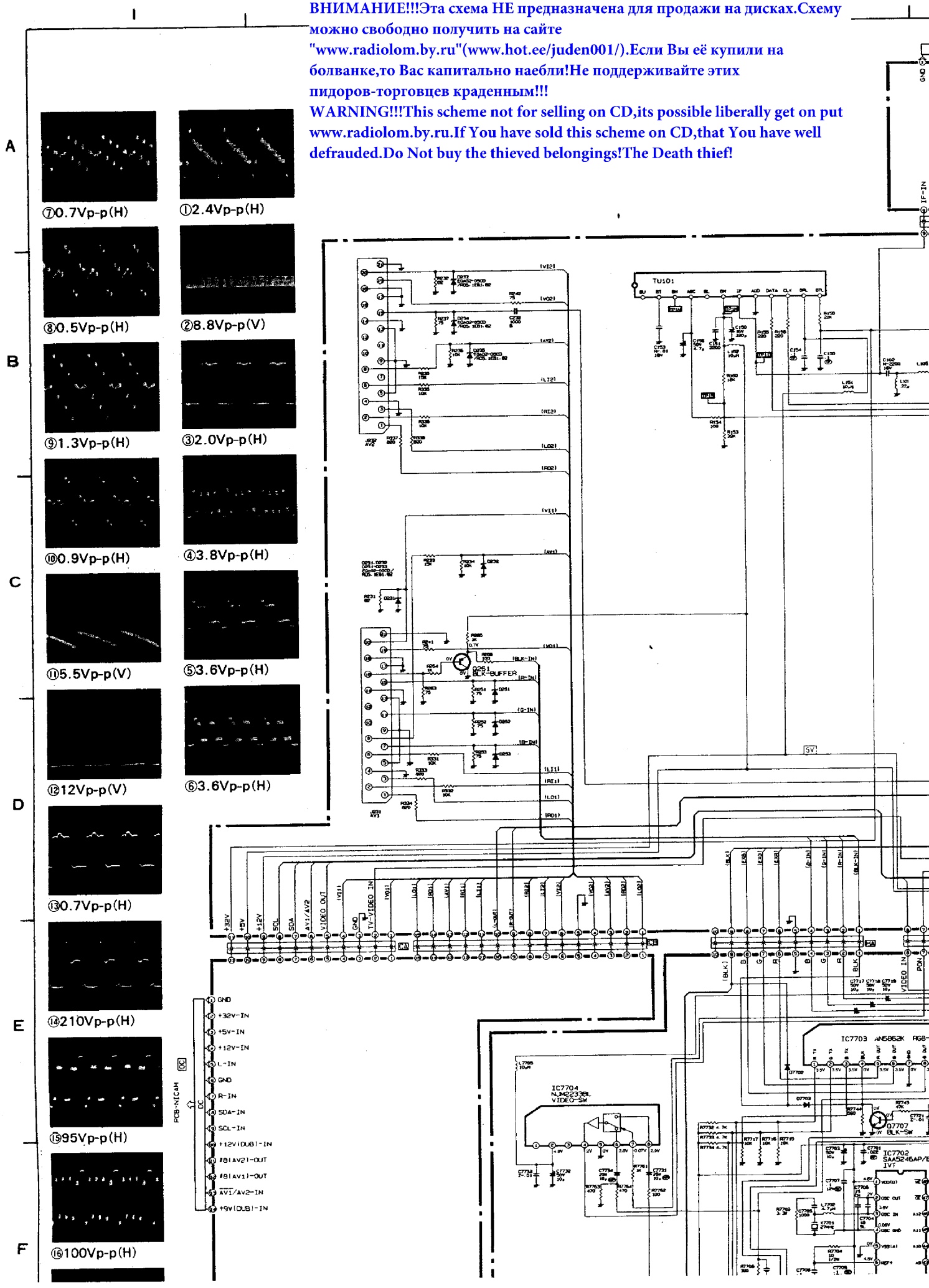

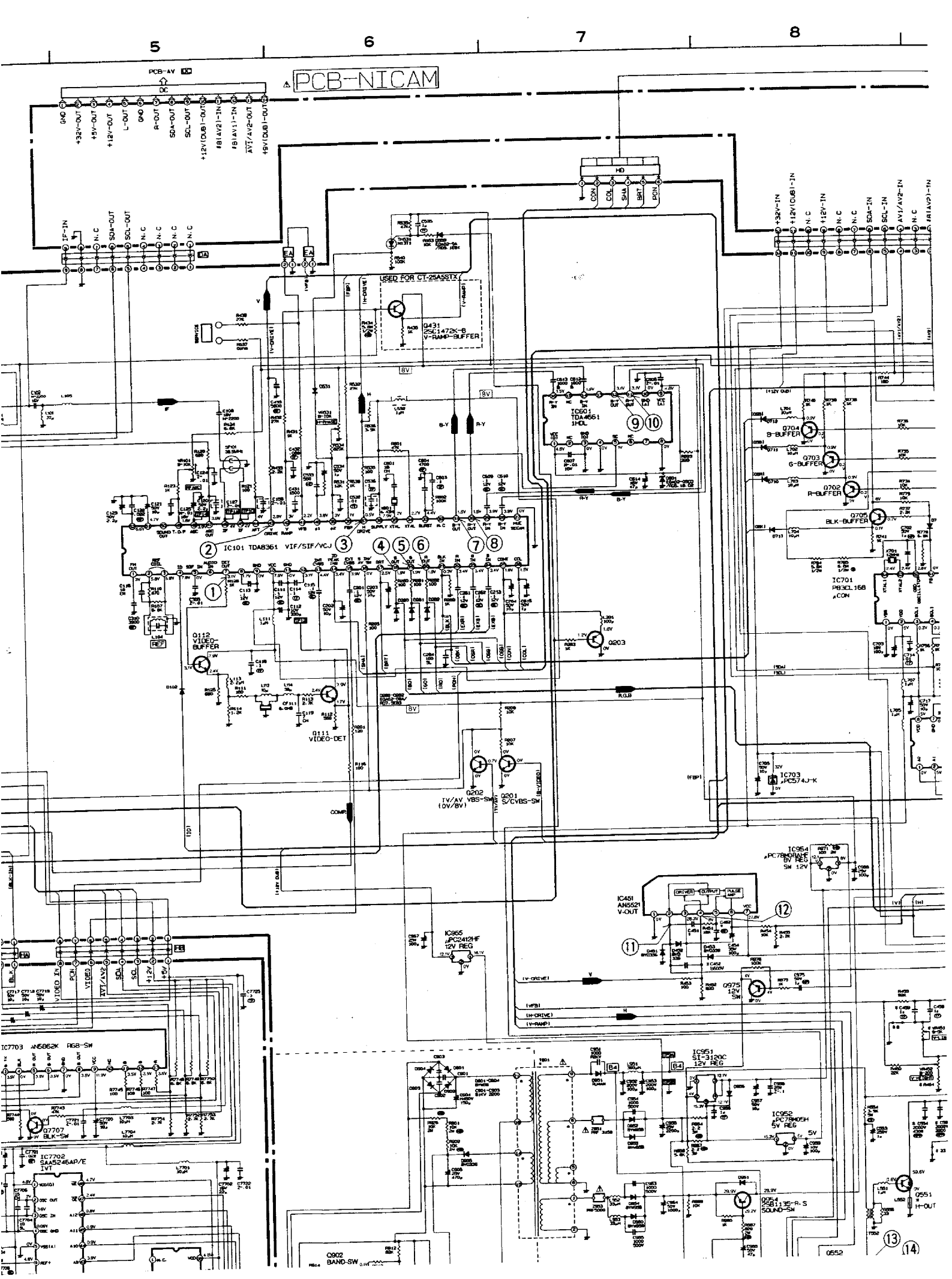
5
6
7
8
PCB-NICAM
PCB-AV
DC
GND
+32V-OUT
+5V-OUT
+12V-OUT
L-OUT
GND
R-OUT
SDA-OUT
SCL-OUT
+12V(DUB)-OUT
AV1(AV2)-IN
AV1(AV1)-IN
AV1/AV2-OUT
+9V(DUB)-OUT
HD
CON
COL
SHA
BRT
PON
IF-IN
N.C
SDA-OUT
SCL-OUT
+32V-IN
+12V(DUB)-IN
+12V-IN
SDA-IN
SCL-IN
AV1/AV2-IN
AV1(AV2)-IN
USED FOR CT-25A5STX
Q431
2SC1472K-B
V-RAMP-BUFFER
IC601
TDA4661
1HOL
Q704
B-BUFFER
Q703
G-BUFFER
Q702
R-BUFFER
Q705
BLK-BUFFER
IC101 TDA8361 VIF/SIF/VCJ
IC701
PB3CL168
μCON
Q112
VIDEO-
BUFFER
Q203
Q111
VIDEO-DET
Q202
TV/AV VBS-SW
(0V/8V)
Q201
S/CVBS-SW
IC703
μPC574J-K
IC954
μPC78M08AHF
5V REG
SW 12V
IC451
AN5521
V-OUT
IC955
μPC2412HF
12V REG
Q975
12V
SW
IC951
ST-3120C
12V REG
IC952
μPC78M05H
5V REG
Q954
2SB1135-R-S
SOUND-SW
Q551
H-OUT
IC7703 AN5862K RGB-SW
Q7707
BLK-SW
IC7702
SAA5246AP/E
IVT
Q902
BAND-SW
Q552

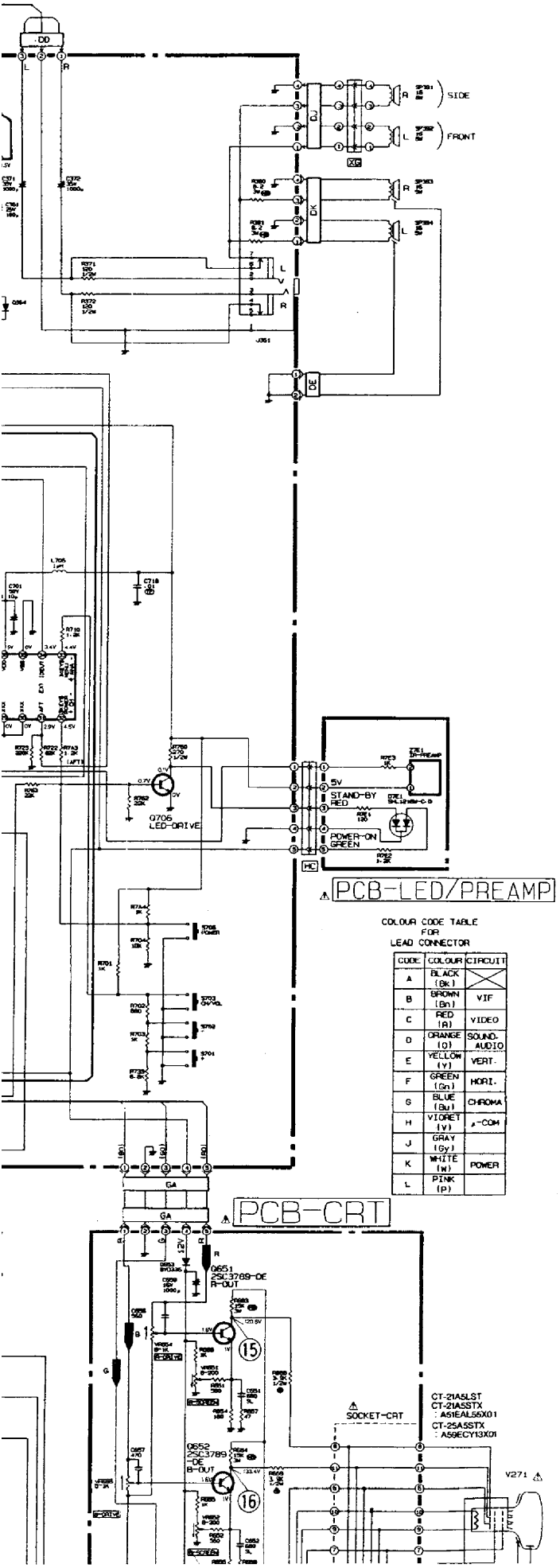

COLOUR CODE TABLE
FOR
LEAD CONNECTOR

CODE	COLOUR	CIRCUIT
A	BLACK (Bk)	
B	BROWN (Bn)	VIF
C	RED (R)	VIDEO
D	ORANGE (O)	SOUND-AUDIO
E	YELLOW (Y)	VERT.
F	GREEN (Gn)	HORI.
G	BLUE (Bu)	CHROMA
H	VIORET (V)	⊥-COM
J	GRAY (Gy)	
K	WHITE (W)	POWER
L	PINK (P)	

IC101
TDA8361

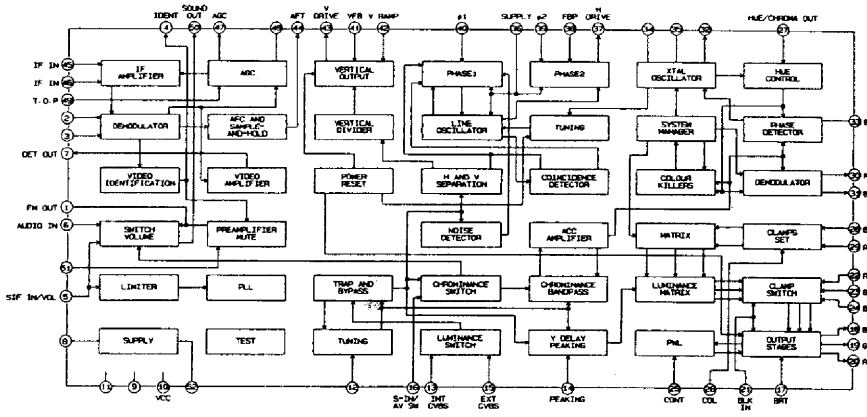

IC702 X24C04P

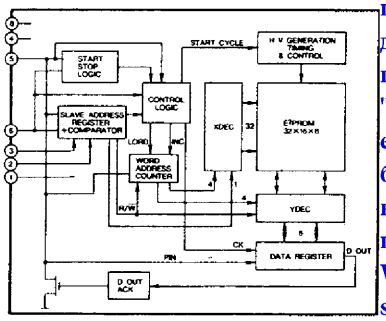

ВНИМАНИЕ!!!Эта схема НЕ предназначена для продажи на дисках.Схему можно свободно получить на сайте "www.radiolom.by.ru"(www.hot.ee/judgen001/).Если Вы её купили на болванке,то Вас капитально наебли!Не поддерживайте этих пидоров-торговцев краденным!!!
WARNING!!!This scheme not for selling on CD,its possible liberally get on put www.radiolom.by.ru.If You have sold this scheme on CD.that You

IC601
TDA4661

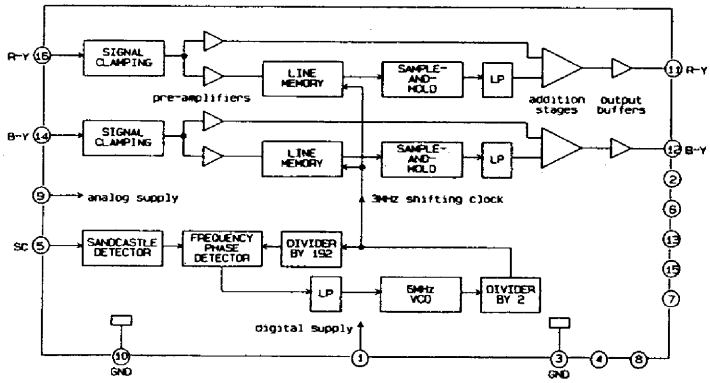

IC901
TEA2261

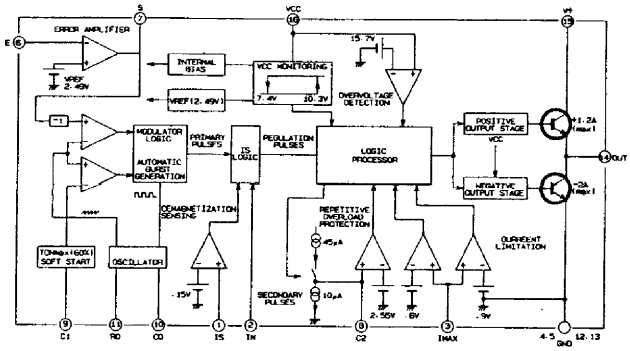

IC7701 HM6264ALSP

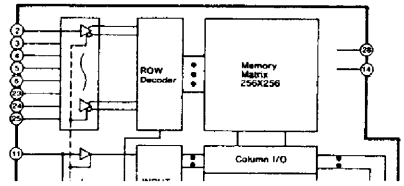

IC7703
AN5862K

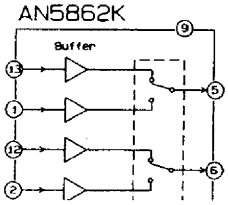

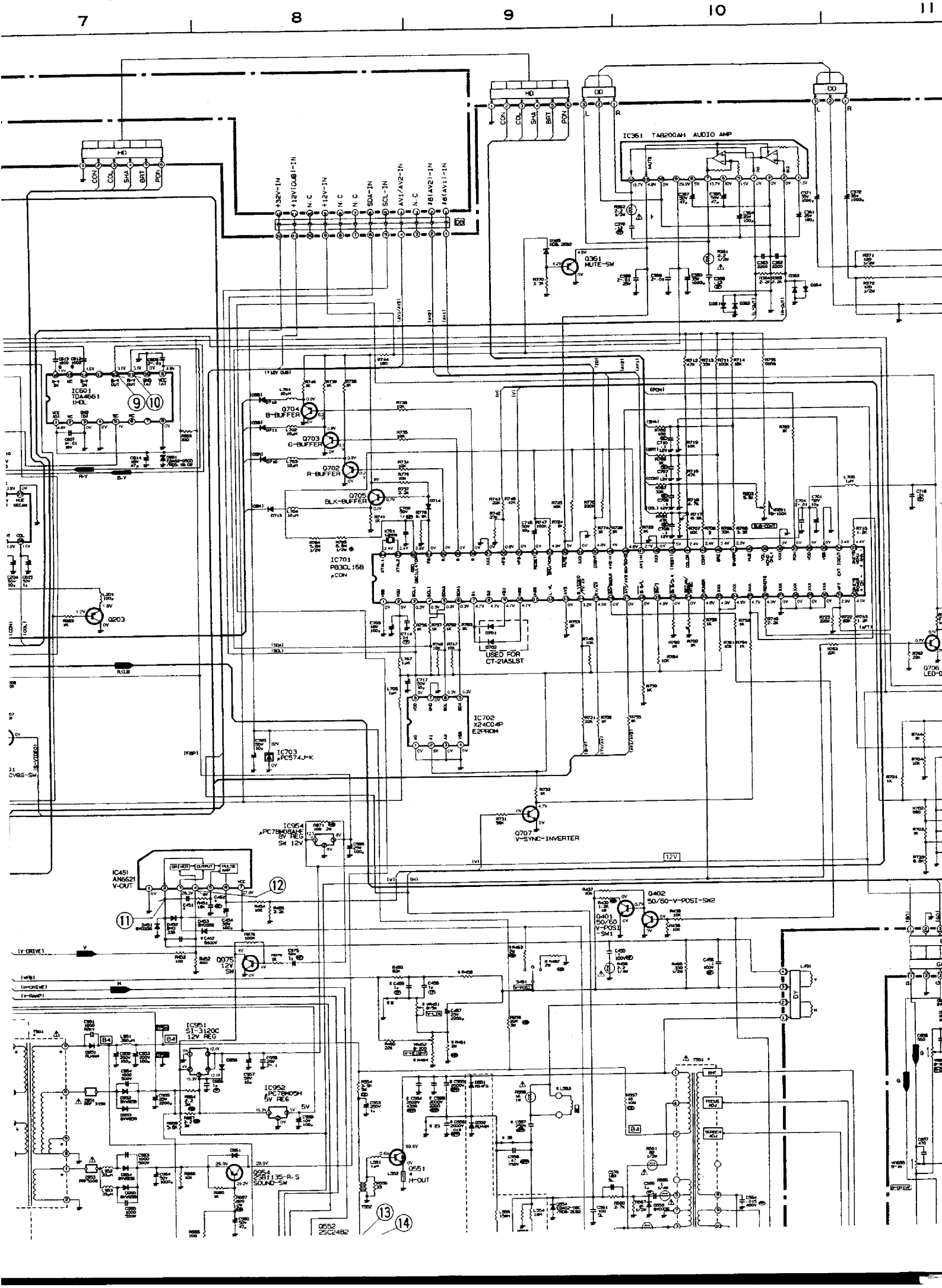
7
8
9
10
11
HD
CON
COL
SHA
BRT
PON
DD
L
R
+32V-IN
+12V(OUB)-IN
N.C
+12V-IN
N.C
SDA-IN
SCL-IN
AV1/AV2-IN
N.C
AB(AV2)-IN
AB(AV1)-IN
IC361 TA8200AH AUDIO AMP
Q361 MUTE-SW
IC601 TDA4661 1HDL
Q704 B-BUFFER
Q703 G-BUFFER
Q702 R-BUFFER
Q705 BLK-BUFFER
IC701 PB3CL168 μCON
Q203
USED FOR CT-21A5LST
IC702 X24C04P E2-PROM
IC703 μPC574J-K
Q707 V-SYNC-INVERTER
IC954 μPC78M08AHF 8V REG SW 12V
IC451 AN5521 V-OUT
Q402 50/60-V-POSI-SW2
Q401 50/60 V-POSI -SW1
Q075 12V SW
IC951 SI-3120C 12V REG
IC952 PC78M05H 5V REG
Q954 2SB1135-R-S SOUND-SW
Q551 H-OUT
Q552 2SC2482
R-Y
B-Y
RGB
CVBS-SW
12V
5V
V-DRIVE
H-DRIVE
V-RAMP
DY

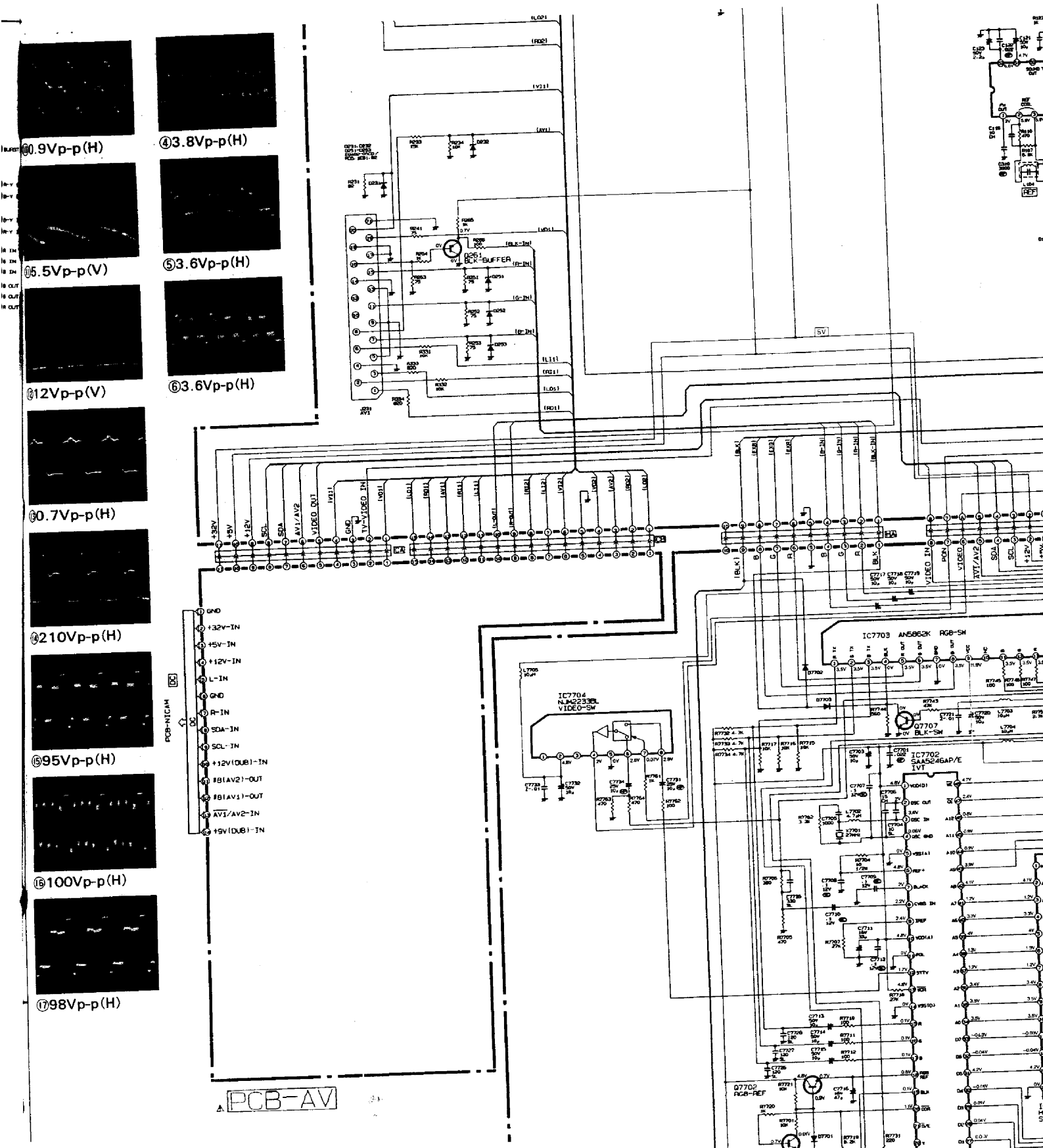

ВНИМАНИЕ!!!Эта схема НЕ предназначена для продажи на дисках.Схему можно свободно получить на сайте "www.radiolom.by.ru"(www.hot.ee/juden001/).Если Вы её купили на болванке,то Вас капитально наебли!Не поддерживайте этих пидоров-торговцев краденным!!!

WARNING!!!This scheme not for selling on CD,its possible liberally get on put www.radiolom.by.ru.If You have sold this scheme on CD,that You have well defrauded.Do Not buy the thieved belongings!The Death thief!

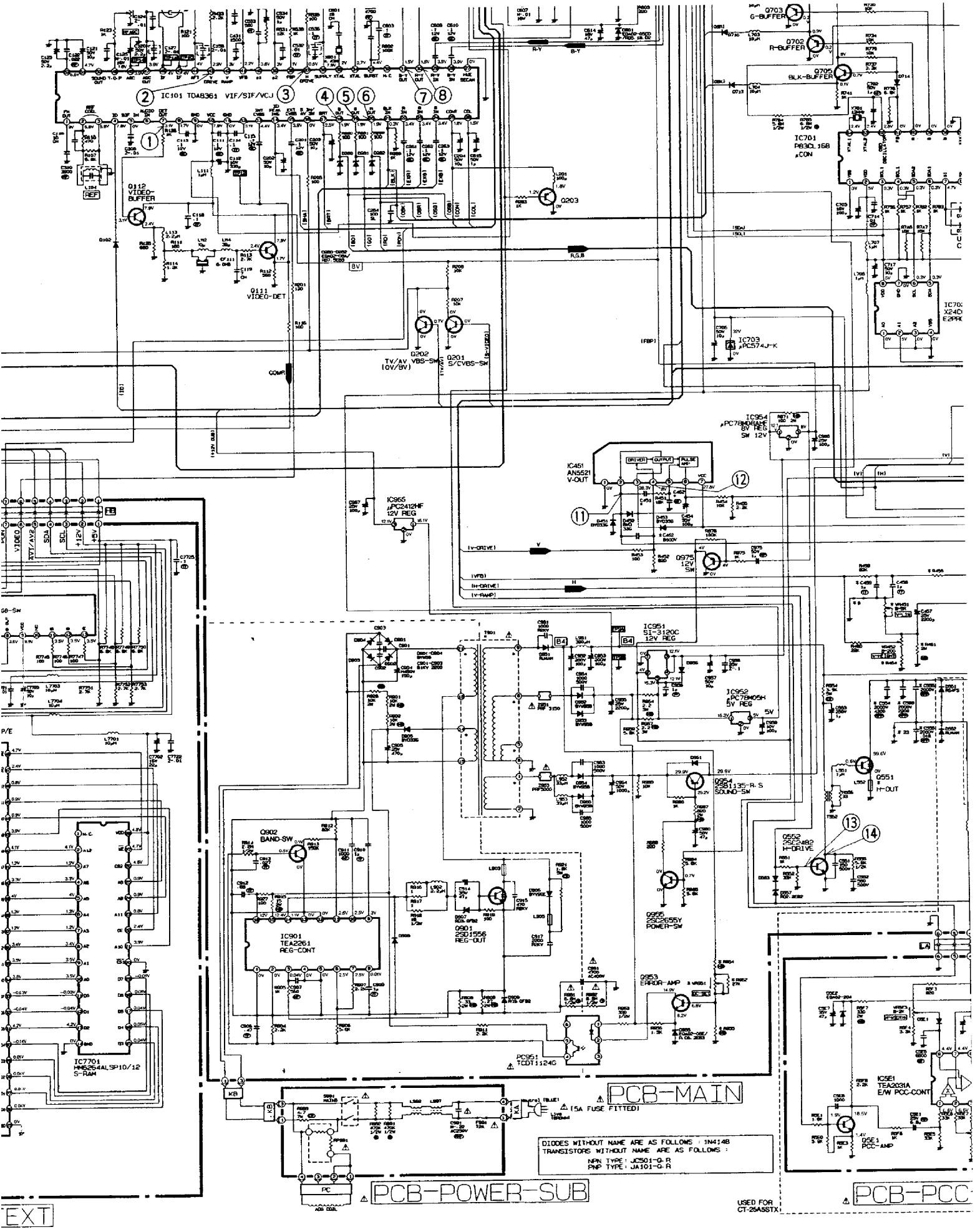
IC101 TDA8361 VIF/SIF/VCJ
Q112 VIDEO-BUFFER
Q111 VIDEO-DET
Q202 TV/AV VBS-SW (0V/8V)
Q201 S/CVBS-SW
Q703 G-BUFFER
Q702 R-BUFFER
Q705 BLK-BUFFER
IC701 P83CL168 μCON
Q203
IC703 μPC574J-K
IC954 μPC78M06AHF 6V REG SW 12V
IC451 AN5521 V-OUT
IC955 μPC2412HF 12V REG
Q975 12V SW
IC951 51-3120C 12V REG
IC952 PC78M05H 5V REG
Q954 2SB1135-R.S SOUND-SW
Q551 H-OUT
Q552 2SC2482 H-DRIVE
Q955 2SC2655Y POWER-SW
Q953 ERROR-AMP
Q902 BAND-SW
IC901 TEA2261 REG-CONT
Q901 2SD1556 REG-OUT
PC951 TCDT1124G
IC7701 HM6264ALSP10/12 S-RAM
IC5E1 TEA2031A E/W PCC-CONT
Q5E1 PCC-AMP
PCB-MAIN
PCB-POWER-SUB
PCB-PCC
(15A FUSE FITTED)
DIODES WITHOUT NAME ARE AS FOLLOWS : 1N4148
TRANSISTORS WITHOUT NAME ARE AS FOLLOWS :
NPN TYPE : JC501-G.R
PNP TYPE : JA101-G.R
USED FOR CT-25A5STX
EXT

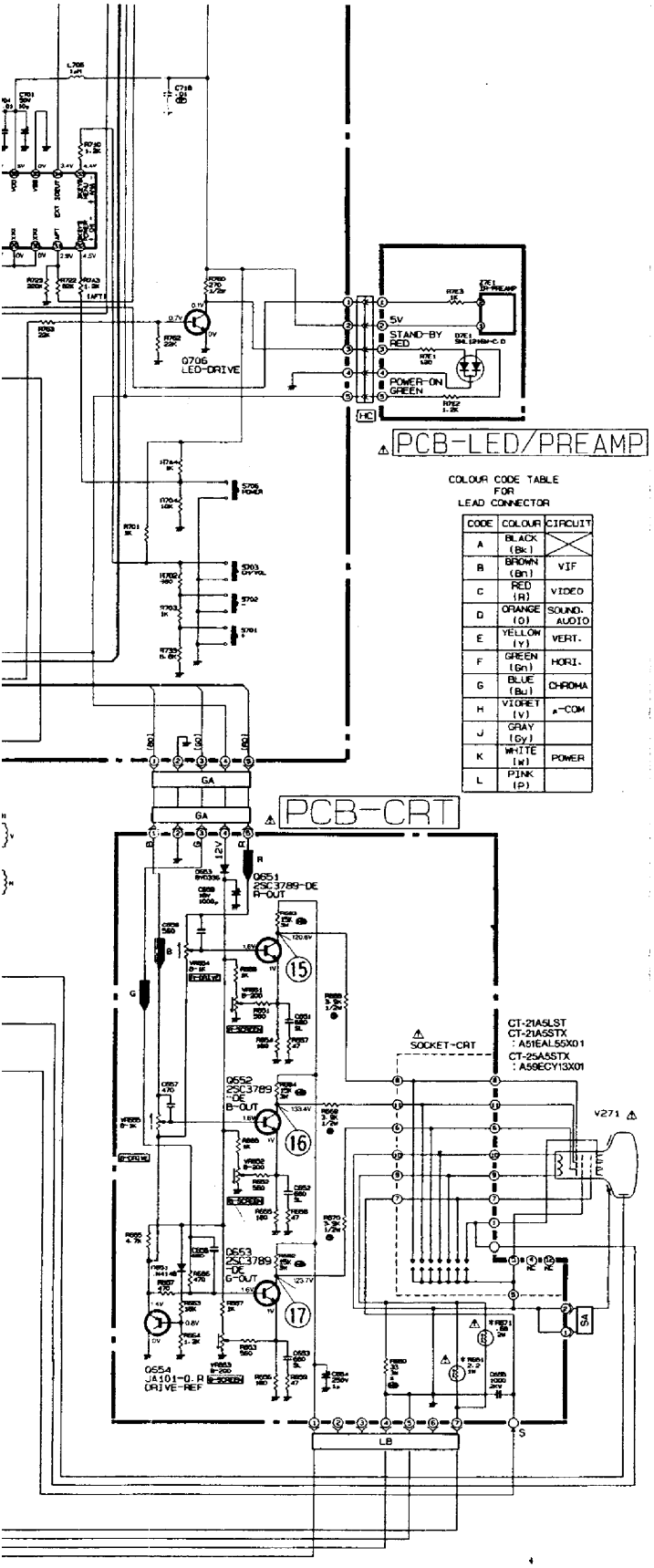

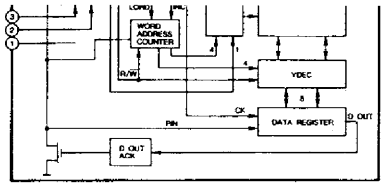

IC601
TDA4661

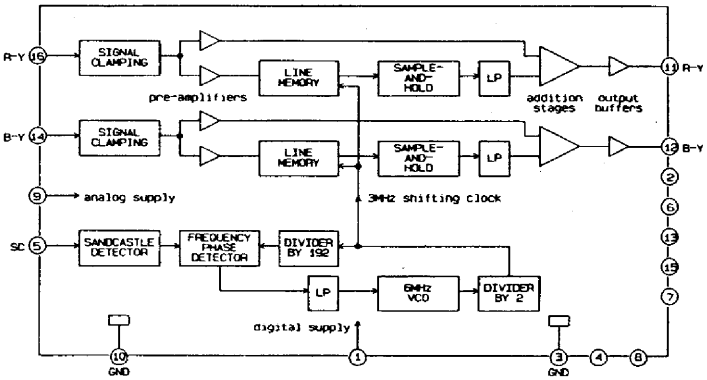

IC901
TEA2261

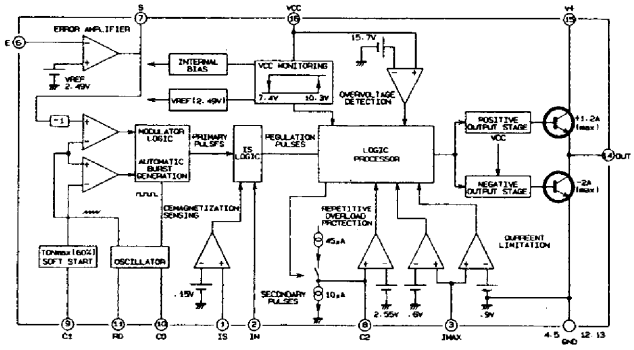

IC7701 HM6264ALSP

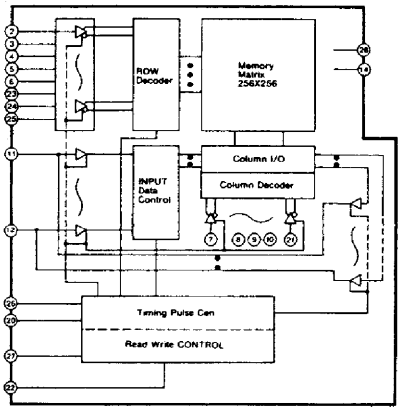

IC7703
AN5862K

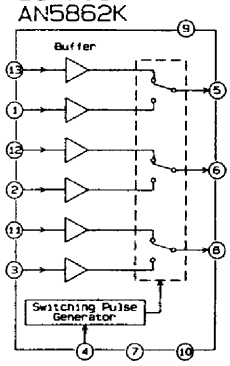

IC7702
SAA5246AP/E

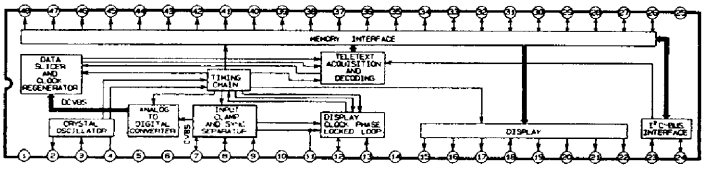

IED — : NOT APPLIED

C554	C555	C556	C557	C558	C560	C568	J8	J23	J35	Q551	R458	R461	R462	R463	R464	R559	R671	R680	R681	R708	R954	R955	R962	VR451	VR951	Z551
O	4300	—	.43	—	1000µ	—	O	O	O	2SD1554	47K	1.8	1.2K	1.2K	0	O	—	O	O	5.6K	120K	7.5K	—	—	B10K	—
—	9100	O	.82	O	3300µ	O	—	—	—	2SD1555	15K	.82	820	820	330	—	O	—	—	10K	160K	8.2K	O	O	B20K	O

ВНИМАНИЕ!!!Эта схема НЕ предназначена для продажи на дисках.Схему можно свободно получить на сайте "www.radiolom.by.ru"(www.hot.ee/juden001/).Если Вы её купили на болванке,то Вас капитально наебли!Не поддерживайте этих пидоров-торговцев краденным!!!
WARNING!!!This scheme not for selling on CD,its possible liberally get on put www.radiolom.by.ru.If You have sold this scheme on CD,that You have well defrauded.Do Not buy the thieved belongings!The Death thief!

T-21A5LST
T-21A5STX
T-25A5STX

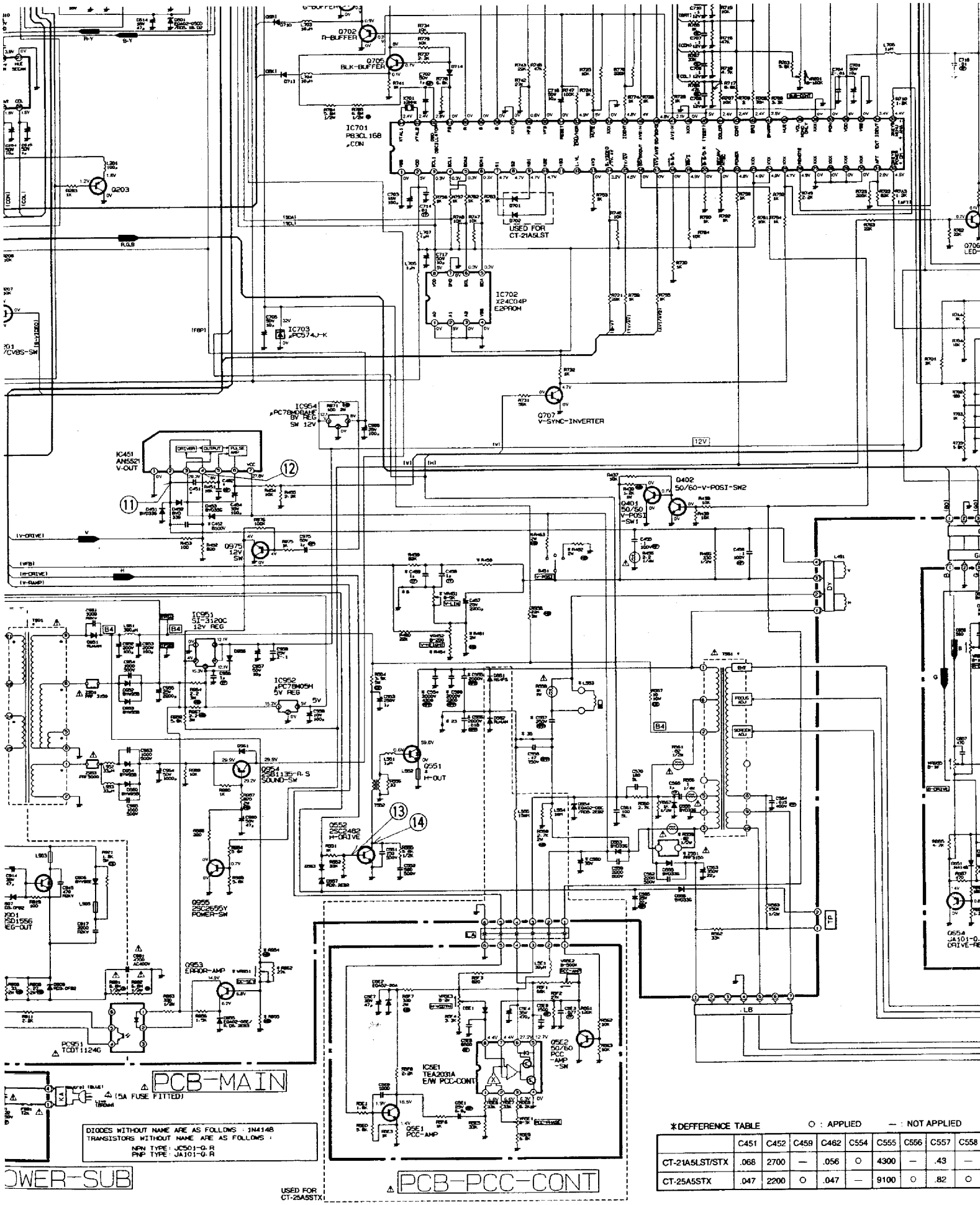

*DEFFERENCE TABLE ○ : APPLIED — : NOT APPLIED

	C451	C452	C459	C462	C554	C555	C556	C557	C558
CT-21A5LST/STX	.068	2700	—	.056	○	4300	—	.43	—
CT-25A5STX	.047	2200	○	.047	—	9100	○	.82	○

ВНИМАНИЕ!!!Эта схема НЕ предназначена для продажи на дисках.Схему можно свободно получить на сайте "www.radiolom.by.ru"(www.hot.ee/juden001/).Если Вы её купили на болванке,то Вас капитально наебли!Не поддерживайте этих пидоров-торговцев краденным!!!
WARNING!!!This scheme not for selling on CD,its possible liberally get on put www.radiolom.by.ru.If You have sold this scheme on CD,that You have well defrauded.Do Not buy the thieved belongings!The Death thief!

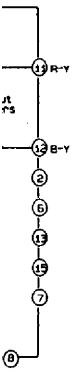

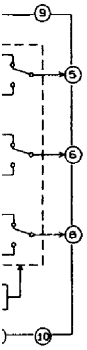

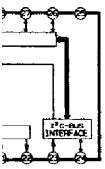

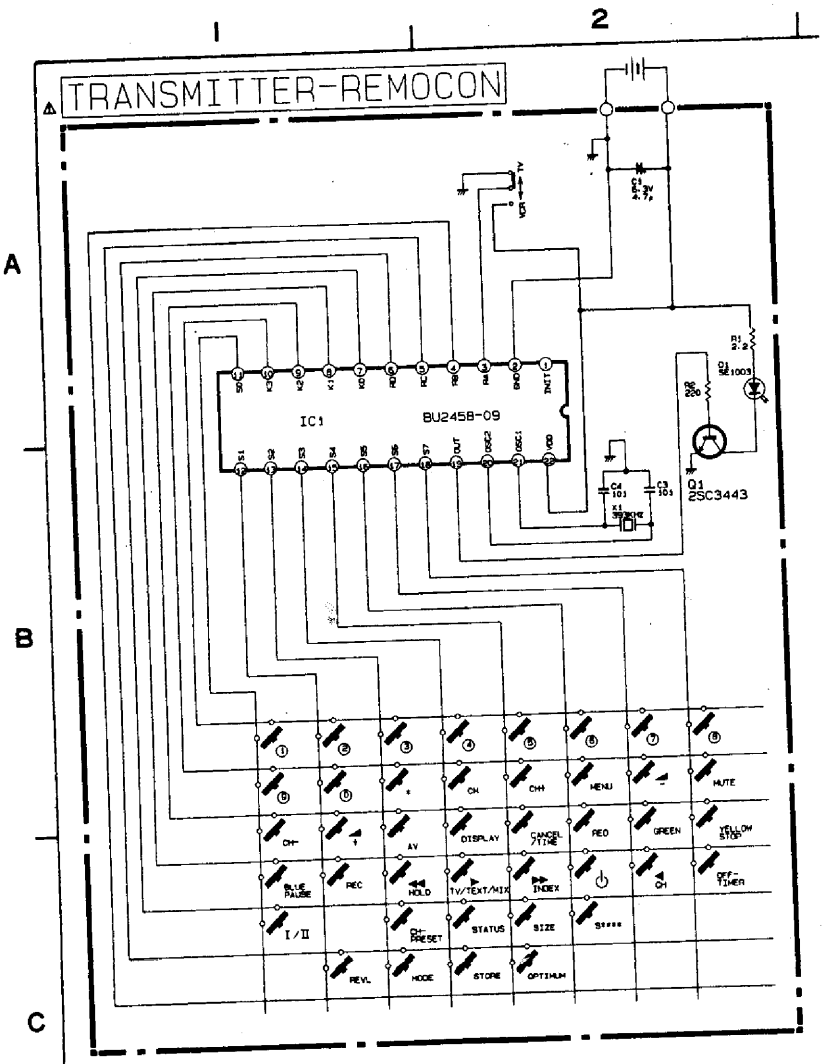

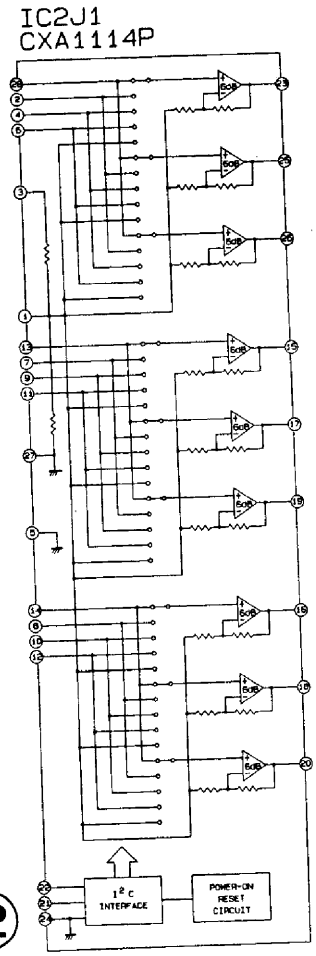

CT-21A5LST
CT-21A5STX
CT-25A5STX

③

②

ВНИМАНИЕ!!!Эта схема НЕ предназначена для продажи на дисках.Схему можно свободно получить на сайте "www.radiolom.by.ru"(www.hot.ee/juden001/).Если Вы её купили на болванке,то Вас капитально наебли!Не поддерживайте этих пидоров-торговцев краденным!!!
WARNING!!!This scheme not for selling on CD,its possible liberally get on put www.radiolom.by.ru.If You have sold this scheme on CD,that You have well defrauded.Do Not buy the thieved belongings!The Death thief!